TRANSCRIPT OF RECORD

SUPREME COURT OF THE UNITED STATES

OCTOBER TERM, 1928

No. 37

INDEPENDENT WIRELESS TELEGRAPH COMPANY,
PETITIONER,

vs.

RADIO CORPORATION OF AMERICA.

ON A WRIT OF CERTIORARI TO THE UNITED STATES CIRCUIT COURT OF APPEALS FOR THE FIFTH CIRCUIT.

FILED JANUARY 21, 1929.

GEORGE WYTHE RICHARDSON, PRINTER, 1929.

[illegible]

(30,400)

SUPREME COURT OF THE UNITED STATES

OCTOBER TERM, 1924

No. 435

INDEPENDENT WIRELESS TELEGRAPH COMPANY, PETITIONER,

vs.

RADIO CORPORATION OF AMERICA

ON A WRIT OF CERTIORARI TO THE UNITED STATES CIRCUIT COURT OF APPEALS FOR THE SECOND CIRCUIT

INDEX

	Original	Print
Record from the district court of the United States, southern district of New York	1	1
Bill of complaint	1	1
Exhibit—De Forest patents in suit	16	8
Order for bill of particulars	17	8
Exhibit A—Circuit diagram	22	10
Bill of particulars	23	10
Agreement between the De Forest Radio Telephone and Telegraph Co. and Western Electric Co., March 16, 1917	35	17
Notice of contract, Western Electric Co. to American Telephone and Telegraph Co	45	21
Agreement between General Electric Company and Radio Corporation of America	46	22
Agreement between General Electric Co. and American Telephone and Telegraph Co	69	34
Extension agreement	96	47

JUDD & DETWEILER (INC.), PRINTERS, WASHINGTON, D. C., DECEMBER 30, 1924

	Original	Print
Notice of motion to dismiss	100	49
Motion to dismiss	101	50
Opinion, Learned, J	102	50
Judgment	110	54
Petition for appeal	111	54
Order allowing appeal	112	55
Assignment of errors	113	55
Citation and service (omitted in printing)	115	56
Bond on appeal (omitted in printing)	117	56
Stipulation as to parts of record to be printed	127	56
Stipulation re transcript of record	130	57
Clerk's certificate	131	57
Proceedings in United States circuit court of appeals for second circuit	132	58
Opinion, Manton, J	132	58
Judgment	139	61
Clerk's certificate	141	61
Order granting certiorari	142	62

[fol. 1] **IN UNITED STATES DISTRICT COURT, SOUTHERN DISTRICT OF NEW YORK**

In Equity.

RADIO CORPORATION OF AMERICA and DE FOREST RADIO TELEPHONE & TELEGRAPH COMPANY, Plaintiffs,

vs.

INDEPENDENT WIRELESS TELEGRAPH COMPANY & AMERICAN TELEPHONE & TELEGRAPH COMPANY, Defendants

On De Forest Patents Nos. 841,387 and 879,532

BILL OF COMPLAINT

To the Honorable the Judges of the District Court of the United States for the Southern District of New York:

The plaintiffs, by this bill of complaint, allege as follows:

1. That the above named plaintiffs are both corporations duly organized and existing under and by virtue of the laws of the State of Delaware, and citizens, residents, and inhabitants of said State.

2. On information and belief, that the above named defendant, Independent Wireless Telegraph Company, is a corporation organized and existing under and by virtue of the laws of the State of Delaware, [fol. 2] and is a citizen and resident of said State, but has a regular and established place of business in the Southern District of New York, where it has committed some of the acts of infringement complained of herein.

3. On information and belief that the above named defendant American Telephone & Telegraph Company is a corporation organized and existing under and by virtue of the laws of the State of New York, and is a citizen of said State and a resident and inhabitant of the Southern District of New York.

4. That the defendant American Telephone & Telegraph Company, as hereinafter alleged, has certain rights and interests in the patents in suit; that before bringing this suit, said defendant was requested to consent to join as a co-plaintiff herein, but declined and is therefore made a defendant.

5. That this is a suit in equity brought under the Patent Laws of the United States for infringement of the hereinafter mentioned United States Letters Patent No. 841,387, issued January 15, 1907, and No. 879,532, issued February 18, 1908.

6. Upon information and belief, that Lee De Forest, being then a citizen of the United States, and, under the laws of the United

States then in force, the first, true, original and sole inventor of certain new and useful improvements in "Devices for Amplifying Feeble Electric Currents" and certain new and useful improvements in "Space Telegraphy," did, on October 25th, 1906, and on January 29th, 1907, respectively, duly make and file applications in writing [fol. 3] with the Commissioner of Patents upon said improvements, and that at the time of making said applications, said improvements had not been known or used by others in this country, and had not been patented or described in any printed publication in this or any foreign country before his invention or discovery thereof, or more than two years prior to his applications aforesaid, respectively, and had not been in public use or on sale in this country for more than two years prior to his applications aforesaid, respectively, and had not been patented in any country foreign to the United States on any application filed by him or his legal representatives or assigns more than twelve months prior to his applications aforesaid respectively.

7. That said Letters Patent numbered 841,387 were, on January 15, 1907, duly issued upon the aforesaid application filed October 25, 1906, and that Letters Patent numbered 879,532 were, on February 18, 1908, duly issued upon the aforesaid application filed January 29, 1907, all the provisions and requirements of the statutes of the United States in such cases made and provided having been duly complied with, said patents being issued to said Lee De Forest, his heirs and assigns, whereby there was granted to him and them for the term of seventeen years from the respective dates thereof, the right to exclude others from making, using and selling, the inventions and improvements set forth, described and claimed therein, throughout the United States and the Territories thereof.

[fol. 4] 8. Upon information and belief, that by mesne instruments in writing, duly executed, delivered, and recorded in the United States Patent Office, the entire right, title, and interest in, to, and under said Letters Patent Nos. 841,387 and 879,532, except certain licenses then outstanding in the defendant, American Telephone & Telegraph Company, was duly transferred from said De Forest to and prior to March 16, 1917, and became vested in the plaintiff, De Forest Radio Telephone & Telegraph Company, its successors and assigns; that on or about March 16, 1917, by an agreement in writing, duly executed, delivered and recorded in the United States Patent Office, the plaintiff, De Forest Radio Telephone & Telegraph Company, transferred to the Western Electric Company, Inc., a New York corporation, its successors and assigns, a license under said Letters Patent Nos. 841,387 and 879,532, said license being granted for the full term of said patents; and that, on or about the 24th day of May, 1917, by an instrument in writing, duly executed, delivered and recorded in the United States Patent Office, said Western Electric Company, Inc., sold, assigned, and transferred to the defendant, American Telephone & Telegraph Company, its successors, legal representatives and assigns, all its right, title, and interest in, to, and under said agreement of March 16, 1917, be-

tween said plaintiff, De Forest Radio Telephone & Telegraph Company and said Western Electric Company, Inc.

9. That by virtue of an agreement in writing between the plaintiff [fol. 5] Radio Corporation of America, and the General Electric Company, a New York Corporation, dated November 20, 1919; and by virtue of an agreement in writing between the defendant American Telephone & Telegraph Company and said General Electric Company, dated July 1, 1920; and by virtue of an agreement in writing between the plaintiff Radio Corporation of America and the defendant American Telephone & Telegraph Company and said General Electric Company and said Western Electric Company, Inc., dated July 1, 1920, all of which agreements were duly executed and delivered, the plaintiff, Radio Corporation of America, acquired certain licenses under said Letters Patent Nos. 841,387 and 879,532, including an exclusive license (except for certain non-exclusive and non-transferable rights of the plaintiff, De Forest Radio Telephone & Telegraph Company) to sell and use radio devices, vacuum tubes, etc., embodying the inventions of said Letters Patent, for radio amateur use and for wireless telegraph uses, and including an exclusive license to use the inventions of said Letters Patent, or any material parts thereof, for commercial wireless telegraph purposes throughout the United States and its territories during the full term of said Letters Patent.

10. Upon information and belief, that the plaintiffs and the defendant American Telephone & Telegraph Company continue to hold their respective rights, titles, interests, and licenses, as aforesaid, in, to and under said Letters Patent Nos. 841,387 and 879,532 at the times of the infringement complained of herein, and now hold the same.

[fol. 6] 11. That the plaintiffs pray that the aforesaid Letters Patent, instruments, agreements and licenses, may be deemed and taken as a part of this bill of complaint, and the plaintiffs ask leave to refer to the originals of the same or duly authenticated copies thereof, now in their possession, or ready in court to be produced, copies of said Letters Patent being annexed hereto.

12. That the inventions of said Letters Patent Nos. 841,387 and 879,532 are being practiced by the plaintiffs and are of great value, importance, benefit and advantage to the public, the plaintiffs and the defendant American Telephone & Telegraph Company; and that the public generally have acknowledged and acquiesced in the exclusive rights granted by said Letters Patent.

13. That the said inventions and improvements or discoveries of said Letters Patent Nos. 841,387 and 879,532 are capable of conjoint use in one and the same device, and, on information and belief, have been and are now being so used in the infringement hereinafter complained of herein.

14. On information and belief, that, since said Letters Patent Nos. 841,387 and 879,532 were granted respectively, the vacuum tubes,

detectors, amplifiers and devices embodying the inventions of said Letters Patent respectively, which have been made and sold or used thereunder, have been marked by fixing thereon the word "Patented," together with the days and years in which said Letters Patent were granted respectively.

15. Upon information and belief, that the Marconi Wireless Telegraph Company of America, formerly a New Jersey corporation, be- [fol. 7] tween April 1902 and November 1919, was engaged in manufacturing, using and selling radio apparatus, and in constructing, maintaining and operating for pay and profit in the United States a chain of commercial wireless telegraph shore stations equipped with wireless telegraph apparatus embodying various inventions of United States Letters Patent owned by said Marconi Company or under which it was duly licensed; that such stations extended along the shore of the Atlantic and Pacific Oceans, the Gulf of Mexico and the Great Lakes within the United States, and that between April 1902 and November 1919 said stations were used principally in transmitting to and receiving from ships and vessels wireless telegraph communications and commercial toll messages for pay and profit by means of said patented apparatus, including vacuum tubes; that said shore stations also performed highly important and useful work between such ships and shore, and in saving life and property at sea and on the Great Lakes and in rendering service to the owners of such ships and the crews and passengers thereon, and that the Marconi Company, in November, 1919, owned or operated sixty of such shore stations and had an extensive toll business in paid messages from and to such shore stations, and a large amount of capital invested therein. That about November 1919 the plaintiff Radio Corporation of America succeeded to such shore to ship business of said Marconi Company and acquired certain of its assets, including all of its patents and patent rights and its said shore stations and ship radio stations.

[fol. 8] 16. That the plaintiff Radio Corporation of America has been, prior to and since July 1, 1920, and is now continuing the business it acquired from said Marconi Company, and acting under the aforesaid rights and licenses it acquired in and under said De Forest Patents Nos. 841,387 and 879,532, has been since that date and is now, engaged in the United States in constructing, maintaining and operating commercial wireless telegraph shore stations equipped with apparatus employing the inventions and vacuum tubes of said Letters Patent Nos. 841,387 and 879,532, in commercial wireless telegraph communication for pay and profit between such shore stations and vessels at sea and on the Great Lakes and the waters tributary thereto; that the said plaintiff Radio Corporation of America has a profitable business in said system of wireless telegraph communication and has a large amount of capital invested therein; that such shore stations are fully equipped to transmit and receive, by means of radio apparatus, including said vacuum tubes, all wireless telegraph communications to and from such vessels,

and such stations through means of said apparatus have performed and are now performing important work in saving life and property at sea and on the Great Lakes and in rendering service to the owners, crews and passengers of vessels.

17. On information and belief that the vacuum tubes for radio purposes, made under and in acordance with said Letters Patent Nos. 841,387 and 879,532, and sold for amateur or experimental use, have been marked in clear, legible type with a notice limiting and [fol. 9] restricting their use to amateur and experimental purposes only, and that ever since July 1, 1920, the vacuum tubes for radio purposes made under and in accordance with said Letters Patent and sold by the plaintiff Radio Corporation of America for amateur or experimental use, have all been marked in clear, legible type with a notice containing the limitation or restriction under which each and every one of said tubes were licensed for sale and use and under which they were purchased or acquired, and which notice was and is as follows:

"Licensed for amateur or experimental use only."

18. That, ever since July 1, 1920, the said vacuum tubes for radio purposes, sold or disposed of by the plaintiff Radio Corporation of America under said Letters Patent Nos. 841,387 and 879,532, for amateur or experimental use, have always been sold in packages or cartons marked in clear, legible type with the aforesaid or a similar notice that said vacuum tubes were licensed for sale and use for amateur or experimental use only, and that the said limitation or restriction under which said vacuum tubes were licensed for sale and use, have always been brought conspicuously to the attention of the trade, jobbers, dealers, distributors, purchasers and users of said vacuum tubes by warning and statements in said plaintiff's advertisements, circulars and in catalogues and otherwise.

19. On information and belief, that prior to and ever since July 1, 1920, it has been a matter of general knowledge in the trade and [fol. 10] among jobbers, dealers, distributors, purchasers, and users of said vacuum tubes sold or disposed of under said Letters Patent Nos. 831,387 and 879,532, for amateur or experimental use, that each and every one of said tubes was licensed for sale or disposition and use for amateur or experimental uses only, and not for commercial purposes, or for use for pay or profit.

20. That the said restriction or limitation under which said vacuum tubes for amateur or experimental uses were and are licensed to be sold or disposed of and used by others, and under which they were and are purchased or acquired, are fair and reasonable and within the rights granted by said Letters Patent Nos. 841,387 and 879,532, and acquired by the plaintiff Radio Corporation of America thereunder, and that a violation of said license restriction or limitation by the use of said tubes for other or commercial purposes or for pay or profit in wireless telegraph communication, particularly

between shore and ships, immediately results in loss and injury to the plaintiff Radio Corporation of America and its rights under said Letters Patent, and in unlawful gain, profit, or advantage to such user of said tubes, and such loss and injury has resulted to said plaintiff, and that the defendant Independent Wireless Telegraph Company has acquired such gain, profit or advantage, by its acts of infringement hereinafter complained of.

21. On information and belief, that the defendant Independent Wireless Telegraph Company subsequent to July 1, 1920, and prior to the execution of this bill of complaint, purchased or acquired [fol. 11] vacuum tubes embodying the inventions and improvements of said Letters Patent Nos. 841,387 and 879,532, or material parts thereof, and which were made under said Letters Patent and sold or disposed of by the plaintiff Radio Corporation of America under its said license to be used for amateur or experimental purposes only, and which were marked with the aforesaid notice "Licensed for Amateur or Experimental Use Only."

22. On information and belief, that the above-named defendant, the Independent Wireless Telegraph Company, well knowing the aforesaid license restriction under which it purchased or acquired the vacuum tubes referred to in the last paragraph thereof, and well knowing that the use of such vacuum tubes was licensed for amateur or experimental purposes only, and without right or license, and in infringement of the plaintiff's rights in said Letters Patent Nos 841,387 and 879,532, has since July 1, 1920, and prior to the execution of this complaint, used said tubes at its shore wireless telegraph stations within the Southern District of New York and State of New York, and elsewhere within the United States, in receiving commercial wireless telegraph communications or wireless telegraph messages for pay or profit, particularly from ships or vessels, and is now using said tubes at its said shore stations in such wireless telegraph communication, and is now threatening to continue said use of such tubes.

23. On information and belief, that the defendant the Independent Wireless Telegraph Corporation has derived and will derive from [fol.12] the aforsaid infringement complained of herein, gains, profits and advantages, but to what amount the plaintiffs are ignorant and cannot set forth; that by reason of the said infringement the plaintiff Radio Corporation of America has been and will be deprived and prevented from receiving gains, profits and advantages to which said plaintiff is lawfully entitled, and which it would have derived and received, and would now be deriving and receiving, but for the aforesaid infringement; that by reason of the aforesaid infringement the plaintiff Radio Corporation of America has been irreparably injured and has sustained and will sustain damages and losses; and that unless the aforesaid infringement is immediately enjoined by a writ of injunction, further and irreparable injury, loss and damage will be caused to the plaintiff the Radio Corporation of America.

24. On information and belief, that the defendant, the Independent Wireless Telegraph Company, prior to the commencement of this suit, had notice of said Letters Patent Nos. 841,387 and 879,532, and of the aforesaid infringement thereof, but notwithstanding said notice is now continuing said infringement.

25. That the plaintiff De Forest Radio Telephone & Telegraph Company, as hereinbefore alleged has certain rights in the patents in suit herein; that before filing this bill of complaint said De Forest Radio Telephone & Telegraph Company was requested to consent to join as a co-plaintiff herein, but declined; that said De Forest Radio Telephone & Telegraph Company is not within the jurisdic- [fol. 13] tion of the Court and therefore cannot be made a defendant herein; and that therefore to prevent a failure of justice, and to enable the plaintiff Radio Corporation of America to protect its exclusive rights under the patents in suit, said De Forest Radio Telephone & Telegraph Company is made a plaintiff herein without its consent.

Wherefore the plaintiffs pray:

1. That the defendant the Independent Wireless Telegraph Company and its officers, attorneys, associates, clerks, servants, agents, workmen and employees, may be pendente lite and perpetually enjoined and restrained by the decree of this Court from directly or indirectly installing or causing to be installed, using or causing to be used, selling or causing to be sold, for commercial purposes, or for pay or profit, in wireless telegraph communication between shore and ships, any vacuum tubes, detectors or amplifiers made under said Letters Patent Nos. 841,387 and 879,532 and embodying or employing the inventions and improvements thereof, or any substantial, material or vital part of parts thereof, and sold or disposed of under a license limitation or restriction to be used for amateur or experimental purposes only.

2. That the defendant the Independent Wireless Telegraph Company may be decreed to account to the plaintiffs and the defendant American Telephone & Telegraph Company, as their interests shall appear, for all such gains, profits and advantages as have accrued to or have been earned or received by said defendant, and also all [fol. 14] damages the plaintiffs, and the defendant American Telephone & Telegraph Company, as their interests may appear, have sustained by reason of said infringement, and that this Court will assess the same, or cause them to be assessed under its direction, and will increase the same in its discretion as provided by law.

3. That the defendant the Independent Wireless Telegraph Company may be decreed to pay the costs, charges and disbursements of this suit.

4. That the plaintiffs and the defendant American Telephone & Telegraph Company may have such other or further relief as premises

and the equity of the case may require and to the Court may seem just.

Radio Corporation of America, by Wm. Brown, Its Vice President. Sheffield & Betts, Solicitors for Plaintiff Radio Corporation of America, 52 William Street, New York, N. Y. L. F. H. Betts, of Counsel for Plaintiff Radio Corporation of America.

[fols. 15 & 16] Jurat showing the foregoing was duly sworn to by Wm. Brown omitted in printing.

(Here follows Exhibit to Bill of Complaint, marked side folio pages 16, 16-1, 16-2, 16-3, 16-4, 16-5, 16-6, and 16-7)

[fol. 17] IN UNITED STATES DISTRICT COURT

[Title omitted]

ORDER FOR BILL OF PARTICULARS

On the pleadings and proceedings heretofore had herein and on the notice of motion and motion for bill of particulars herein, dated May 9, 1923, and after hearing W. H. Taylor, Jr., Esq., of counsel for defendant Independent Wireless Telegraph Company in support thereof and Abel E. Blackmar, Jr., Esq., of counsel for the plaintiff Radio Corporation of America, in opposition thereto, it is now, on motion of Pennie, Davis, Marvin & Edmonds, solicitors for said defendant, hereby

Ordered, that the said plaintiff Radio Corporation of America served upon the solicitors for the said defendant Independent Wireless Telegraph Company, within ten (10) days from the date hereof, and file a bill of particulars which shall set forth fully, particularly, and specifically the following:

1. The claims of the patent in suit No. 841,387 upon which said plaintiff intends to rely to support its allegation of infringement;

[fol. 18] 2. The claims of the patent in suit No. 879,532 upon which plaintiff intends to rely to support its allegation of infringement;

3. What instruments in writing, assignments and licenses are referred to in paragraph 8 of the bill of complaint herein, together with copies of any of said instruments in writing, assignments and licenses which are not on record in the United States Patent Office (it being stipulated that, as to documents which are on record in said Patent Office, it will be sufficient for said plaintiff to identify such documents by their dates, the parties thereto, and the dates and places of record thereof);

No. 841,387. PATENTED JAN. 15, 1907.

L. DE FOREST.

DEVICE FOR AMPLIFYING FEEBLE ELECTRICAL CURRENTS.

APPLICATION FILED OCT. 25, 1906.

2 SHEETS—SHEET 1.

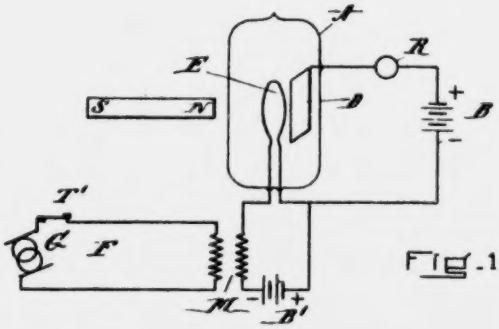

Fig. 1.

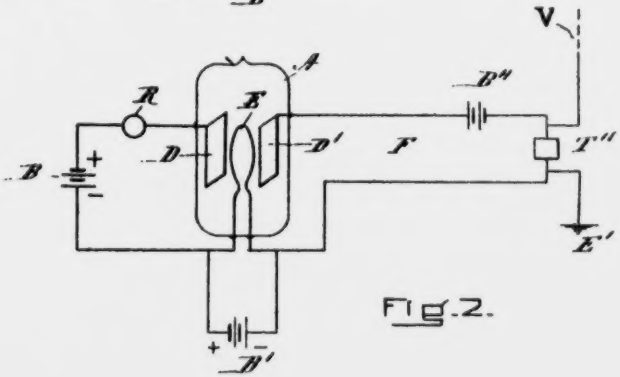

Fig. 2.

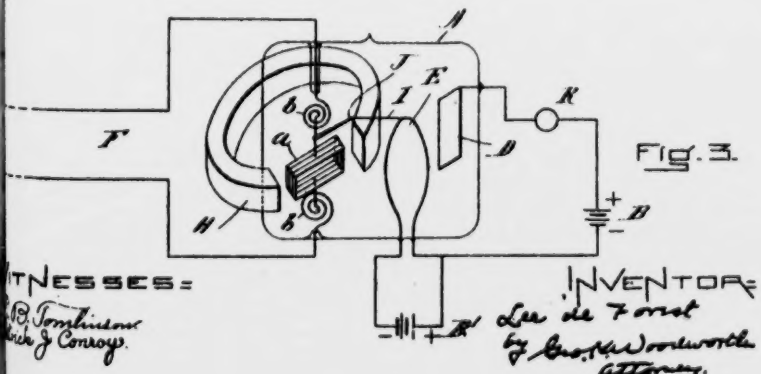

Fig. 3.

WITNESSES:
R. P. Tomlinson
Chas. J. Conroy.

INVENTOR:
Lee de Forest
by Geo. H. Woodworth
Attorney.

16-1

No. 841,387. PATENTED JAN. 15, 1907.

L. DE FOREST.

DEVICE FOR AMPLIFYING FEEBLE ELECTRICAL CURRENTS.

APPLICATION FILED OCT. 25, 1906.

2 SHEETS-SHEET 2.

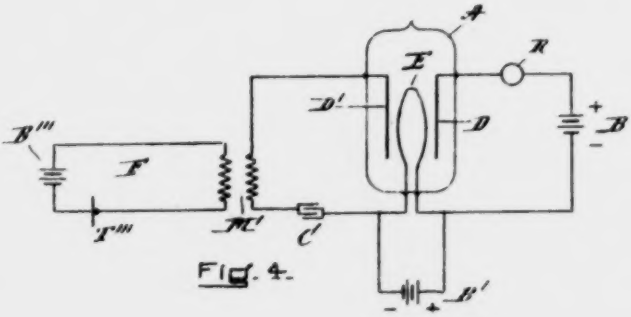

Fig. 4.

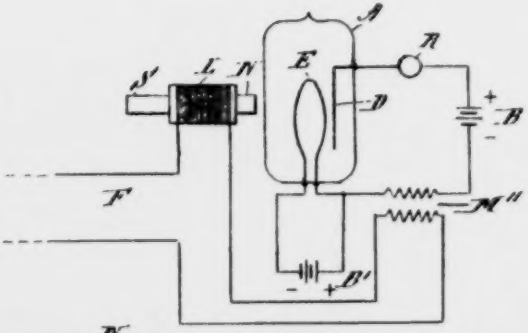

Fig. 5.

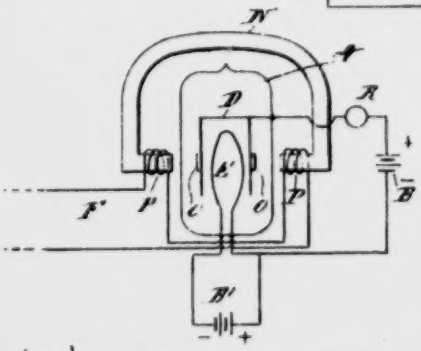

Fig. 6

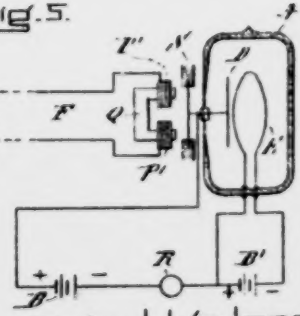

Fig. 7.

WITNESSES:
E. B. Tomlinson
Patrick J. Conroy

INVENTOR:
Lee de Forest
by Geo. H. Woodworth
Attorney

UNITED STATES PATENT OFFICE.

LEE DE FOREST, OF NEW YORK, N. Y.

DEVICE FOR AMPLIFYING FEEBLE ELECTRICAL CURRENTS.

No. 841,387. Specification of Letters Patent. Patented Jan 15, 1907.

Application filed October 25, 1906. Serial No. 340,467.

To all whom it may concern:

Be it known that I, LEE DE FOREST, a citizen of the United States, and a resident of New York, in the county of New York and State of New York, have invented a new and useful Improvement in Devices for Amplifying Feeble Electrical Currents, of which the following is a specification.

My invention relates to devices for amplifying feeble electrical currents—such, for example, as telephone-currents; and its object is to produce an amplifying device of greater efficiency and simplicity than those heretofore employed.

My invention will be described with reference to the drawings accompanying and forming a part of this specification, and in which—

Figures 1, 2, 3, 4, 5, 6, and 7 represent conventionally or diagrammatically various arrangements of apparatus and circuits whereby my invention may be carried into effect.

In the figures, A represents an evacuated vessel inclosing a sensitive conducting gaseous medium maintained in a condition of molecular activity.

R is a signal-indicating device.

B B′ are batteries or other sources of electrical energy.

D E D′ are electrodes sealed within the receptacle A.

The circuit B R D E is a local receiving-circuit. The circuit F is a line-circuit conveying the currents to be amplified to the amplifying device. The electrode E, which may be of platinum, tantalum, carbon, or other suitable material, is heated and preferably maintained incandescent by the battery B′. The electrodes D and D′, which may be plates of platinum or other suitable material, are placed in close proximity to the electrode E, and when the electrode D′ is employed its separation from the electrode E preferably is less than that of the electrode D therefrom.

In Fig. 1, N S represent a magnet placed adjacent to the vessel A. The currents to be amplified may be impressed upon the circuit which includes the heated electrode or filament E—as, for example, by means of the transformer M—and the magnetic field set up by these currents reacts upon the field set up by the magnet N S, thereby causing a slight variation in the separation between the electrodes D E. I have found that the slightest variation in the separation of the hot and cold electrodes produces a large and disproportionately greater variation in the flux between said electrodes, especially if the latter are close together, and such variation in flux may be made manifest by the signal-indicating device R.

In Fig. 2 the current to be amplified may be impressed upon the medium intervening between the electrodes D and E, and thereby alter, by electrostatic attraction, the separation between the electrodes. In this case D′ may be a strip of platinum-foil, and the slightest approach thereof toward the filament will act to slightly cool the gaseous medium, and thereby alter the current in the local circuit, or, if D′ is rigid, the increase in electrostatic attraction between D′ and E will cause E to recede from D, and thereby alter the current in the local circuit.

In Fig. 3 the filament E is connected, by means of a minute platinum wire I, to the arm J, which is secured to the coil *a*, placed between the poles of the magnet H and secured to the walls of the vessel A through the spiral springs *b b*. The line-current to be amplified in this case is passed through the coil *a* through the springs *b b*, and the resulting rotation of the coil varies the separation between the electrodes D E, thereby altering the current in the local circuit.

In Fig. 4 the currents to be amplified may be impressed upon the gaseous medium intervening between D′ and E by means of the transformer M′. A condenser C may be included in series with the secondary of said transformer and the electrodes D′ E. In this case there may or may not be a variation between the separation of the electrodes, and the currents to be amplified may vary the motions of the ions around the filament, thereby controlling to a greater degree the flux between said filament and the electrode D.

In Fig. 5 the currents to be amplified may be passed through the solenoid surrounding the magnet N S, and thereby vary the field, which by coacting with the magnetic field surrounding the electrode E determines the normal separation of the electrodes D and E. Even without creating actual movements between the electrodes D and E the varying magnetic flux produced by the line-current passing through the solenoid L will affect the motion of the ions in the gaseous medium, and thereby alter the current in the local circuit.

In Fig. 6 the electrode D may be consti-

tuted of iron or may consist of platinum plates provided with small iron armatures O O. In either case the currents to be amplified by passing through the solenoids P P, which surround the poles of the magnet N, effect the desired variation in the separation of the electrodes D and E.

In Fig. 7 the electrode D and diaphragm S may both be rigidly secured to the inside and outside, respectively, of the glass wall of the vessel A at a point where said wall has been flattened and made very thin, like the crystal of a watch. The currents to be amplified in this case by operating upon the coils P′ P′, surrounding the magnet Q, effect slight movements of the diaphragm S, and these movements are mechanically transmitted through the glass wall of the vessel A to the electrode D, thereby varying the current in the local receiving-circuit.

It will be obvious that the amplifying device, which constitutes the subject-matter of the present invention, is not limited in its use to any particular kind of electrical circuit or apparatus, but that it is capable of general application wherever an amplifying device is required. By way of example of its application to a wire telegraph or cable system I have shown the line F in Fig. 1 as including a telegraph transmitting-key T′ and source of vibratory current G. In Fig. 2 I have shown the line F as constituting the local circuit of a wireless-telegraph receiving system including the battery B″ and oscillation-detector T″, the latter being connected in series with an antenna V and the earth E′. In Fig. 4 I have shown the line F as constituting a telephone-circuit including the microphone-transmitter T‴ and battery B‴. In all instances it will be understood by those skilled in the art and without going into further detail that the signal-indicating device R, which is included in the local receiving-circuit, may be any device suitable for the purpose of reproducing the signal initiated in the line F.

I do not limit myself to any of the specific embodiments of my invention herein described, inasmuch as many modifications will readily occur to those skilled in the art without departing from the principle of my invention.

I claim—

1. In a device for amplifying electrical currents, an evacuated vessel inclosing a sensitive conducting gaseous medium maintained in a condition of molecular activity, two electrodes sealed within said vessel, a local receiving-circuit associated with said electrodes, and means whereby the sepa said electrodes may be varied by the to be amplified.

2. In a device for amplifying electr rents, an evacuated vessel, two el sealed within said vessel, means for one of said electrodes, a local recei cuit associated with said electrod means whereby the separation of s trodes may be varied by the curre amplified.

3. In a device for amplifying electr rents, an evacuated vessel, two el sealed within said vessel, a circuit i a source of electric energy connect ries with one of said electrodes, a loca ing-circuit associated with said el and means whereby the separation electrodes may be varied by the cu be amplified.

4. In a device for amplifying electr rents, an evacuated vessel, three el s aled within said vessel, means for one of said electrodes, a local recei cuit including two of said electro means for passing the current to be a between one of the electrodes whi cluded in the receiving-circuit and electrode.

5. In a device for amplifying electr rents, an evacuated vessel inclosing a medium, means other than the rece ergy for maintaining said gaseous m a condition of molecular activity, m impressing the currents to be amplif said gaseous medium, and a local r circuit having its electrodes sealed said vessel.

6. In a device for amplifying electr rents, an evacuated vessel, a hea trode and two non-heated electrod within said vessel, the non-heated el being unequally spaced with respec heated electrode, a local receiving-c cluding said heated electrode and th the non-heated electrodes which greater separation from the heated e and means for passing the current t plified between the heated electrode other non-heated electrode.

In testimony whereof I have here scribed my name this 17th day of 1906

LEE DE FO

Witnesses:
RALPH POLK BUELL,
SIDNEY WILLIAMS

No. 879,532. PATENTED FEB. 18, 1908.

L. DE FOREST.

SPACE TELEGRAPHY.

APPLICATION FILED JAN. 29, 1907.

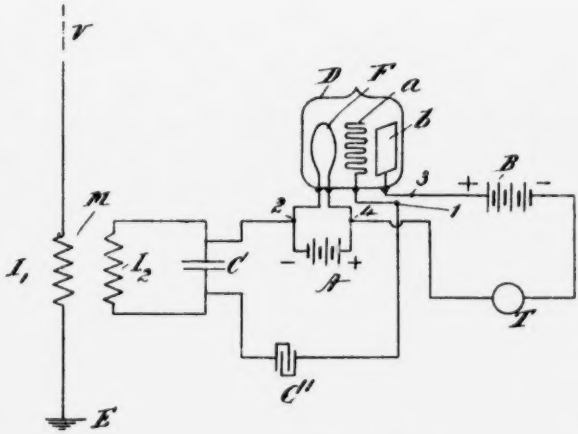

Fig. 1.

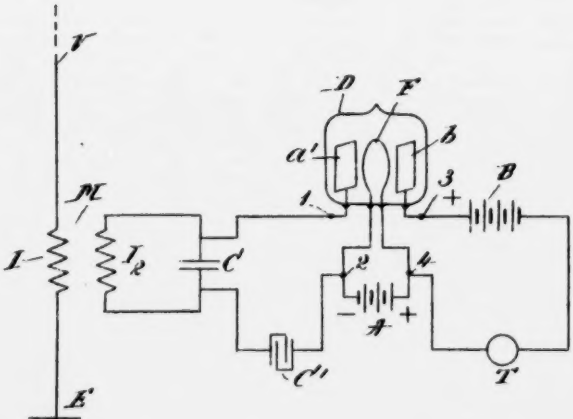

Fig. 2.

WITNESSES-
C. B. Tomlinson
Blanche J. Conroy

INVENTOR
Lee de Forest
by Geo. H. Woodworth
Atty.

16-5

UNITED STATES PATENT OFFICE.

LEE DE FOREST, OF NEW YORK, N. Y., ASSIGNOR, BY MESNE ASSIGNMENTS, TO DE FOREST RADIO TELEPHONE CO., A CORPORATION OF NEW YORK.

SPACE TELEGRAPHY.

No. 879,532. Specification of Letters Patent. Patented Feb. 18, 1908.

Application filed January 29, 1907. Serial No. 354,662.

To all whom it may concern:

Be it known that I, LEE DE FOREST, a citizen of the United States, and a resident of New York, in the county of New York and State of New York, have invented a new and useful Improvement in Space Telegraphy, of which the following is a specification.

My invention relates to wireless telegraph receivers or oscillation detectors of a type heretofore described in my prior Letters Patent Nos. 824,637, June 26, 1906 and 836,070, November 13, 1906.

The objects of my invention are to increase the sensitiveness of oscillation detectors comprising in their construction a gaseous medium by means of the structural features and circuit arrangements which are hereinafter more fully described.

My invention will be described with reference to the drawings which accompany and form a part of the present specification, although it is to be understood that many modifications may be made in the apparatus and systems herein described without departing from the principles of my invention.

In the drawings, Figure 1 represents in diagram a wireless telegraph receiving system comprising an oscillation detector constructed and connected in accordance with the present invention and Fig. 2 represents a space telegraph receiving system having a modified form of oscillation detector connected therein in a manner which constitutes one of the subjects matter of said invention.

V I_1 E is an elevated conductor system including the elevated conductor V, earth connection E, and primary I_1 of the transformer M, the secondary I_2 of which forms part of the tuned receiving circuit I_2 C. It will be understood of course that the aforesaid tuned receiving circuit may be associated with the elevated conductor system in any suitable manner.

D represents an evacuated vessel, preferably of glass, having sealed therein three conducting members, F, *a* and *b*, in Fig. 1 and F, *a'* and *b* in Fig. 2. The conducting member or electrode F is shown as consisting of a filament, preferably of metal, which is connected in series with the battery A or other source of electrical current of sufficient strength to heat said filament, preferably to incandescence. The conducting member *b*, which may be a plate of platinum, has one end brought out to the terminal 3. Interposed between the members F and *b* is a grid-shaped member *a*, which may be formed of platinum wire, and which has one end brought out to the terminal 1. The local receiving circuit, which includes the battery B, or other suitable source of electromotive force, and the signal indicating device T, which may be a telephone receiver, has its terminals connected to the plate *b* and filament F at the points 3 and 4 respectively. The means for conveying the oscillations to be detected to the oscillation-detector, are the conductors which connect the filament F and grid *a* to the tuned receiving circuit and, as shown, said conductors pass from the terminals 2 and 1 to the armatures of the condenser C.

I have determined experimentally that the presence of the conducting member *a*, which as before stated may be grid-shaped, increases the sensitiveness of the oscillation detector and, inasmuch as the explanation of this phenomenon is exceedingly complex and at best would be merely tentative, I do not deem it necessary herein to enter into a detailed statement of what I believe to be the probable explanation.

In associating an oscillation detector of the above mentioned type, said detector being now commonly known as the audion, with a closed tuned circuit, it will be noted by reference to Fig. 2, that the secondary I_2 closes a circuit containing a battery shown at B through the electrode *b*, conducting member *a'* and the conducting gaseous medium intervening between said electrode and member. Also by reference to Fig. 1, it will be seen that a similar closed circuit exists between said battery, and the electrode *b* and conducting member *a*. In order to close each of said circuits to the passage of direct current from the aforesaid battery therethrough, or to prevent the development of a difference of potential between the members *a* and *b*, or between *a'* and *b*, or to prevent the members *a* or *a'* from receiving an electrical charge from said battery, I insert the condenser C' in said otherwise mechanically closed circuit and find that the presence of said condenser produces a great increase in the sensitiveness of the oscillation detector as determined by the very marked increase in the sound produced in the telephone T

when said condenser is present over the sounds produced therein under the same conditions when said condenser is not employed.

It will be understood that the circuit arrangements herein described with reference to the particular forms of audion herein disclosed may with advantage also be employed with various other types of audion.

I claim:

1. An oscillation detector comprising an evacuated vessel, an electrode inclosed therein, means for heating said electrode, a second electrode inclosed within said vessel, a local circuit having its terminals electrically connected to said electrodes, a conducting member inclosed within said vessel and located between said electrodes, and means for conveying the oscillations to be detected to the first mentioned electrode and said conducting member.

2. An oscillation detector comprising an evacuated vessel, two electrodes inclosed within said vessel, means for heating one of said electrodes, and a conducting member inclosed within said vessel and interposed between said electrodes.

3. An oscillation detector comprising an evacuated vessel, two electrodes inclosed within said vessel, means for heating one of said electrodes, and a grid-shaped member of conducting material inclosed within said vessel and interposed between said electrodes.

4. An oscillation detector comprising an evacuated vessel, a filament sealed therein, a source of electrical energy connected in series with said filament, an electrode sealed in said vessel, a local circuit having its terminals connected to said filament and electrode, respectively, said local circuit including a source of electromotive force and a signal indicating device, a grid of conducting material sealed in said vessel and interposed between said filament and electrode, and means for conveying the oscillations to be detected to said filament and grid.

5. An oscillation detector comprising an evacuated vessel, an electrode inclosed therein, means for heating said electrode, a second electrode inclosed within said vessel, a local circuit having its terminals connected to said electrodes, a conducting member inclosed within said vessel and located between said electrodes, a closed circuit for conveying the oscillations to be detected to said first mentioned electrode and conducting member, and a condenser in said closed circuit.

6. An oscillation detector comprising an evacuated vessel, two electrodes inclosed therein, means for heating one of said electrodes, a conducting member inclosed within said vessel and interposed between said electrodes, means for establishing a difference of electrical potential between said electrodes and means for preventing said conducting member from becoming electrically charged.

7. An oscillation detector comprising an evacuated vessel inclosing a sensitive conducting gaseous medium, three conducting members inclosed therein, a closed oscillation circuit, a circuit connecting an element of said oscillation circuit with two of said members, a condenser in said circuit, a signal-indicating device, and a circuit connecting said device with one of said two members and with the third member.

8. An oscillation detector comprising an evacuated vessel, two electrodes inclosed therein, means for heating one of said electrodes, a conducting member inclosed within said vessel and interposed between said electrodes, means for establishing a difference of electrical potential between said electrodes and means for preventing the establishment of a difference of electrical potential between one of said electrodes and said conducting member.

9. An oscillation detector comprising an evacuated vessel, two electrodes inclosed therein, means for heating one of said electrodes, a grid of conducting material inclosed within said vessel and interposed between said electrodes, means for establishing a difference of electrical potential between said electrodes and means for preventing said grid from becoming electrically charged.

10. An oscillation detector comprising an evacuated vessel, two electrodes inclosed therein, means for heating one of said electrodes, a grid of conducting material inclosed within said vessel and interposed between said electrodes, means for establishing a difference of electrical potential between said electrodes and means for preventing the establishment of a difference of electrical potential between one of said electrodes and said grid.

11. An oscillation detector comprising an evacuated vessel, an electrode inclosed therein, means for heating said electrode, a second electrode inclosed within said vessel, a local circuit having its terminals electrically connected to said electrodes, a grid of conducting material inclosed within said vessel and located between said electrodes, and means for conveying the oscillations to be detected to the heated electrode and grid.

12. An oscillation detector comprising an evacuated vessel, an electrode inclosed therein, means for heating said electrode, a second electrode inclosed within said vessel, a local circuit having its terminals connected to said electrodes, a grid of conducting material inclosed within said vessel and located between said electrodes, a closed circuit for conveying the oscillations to be detected to the heated electrode and grid, and a condenser in said closed circuit.

13. An oscillation detector comprising an

evacuated vessel, an electrode inclosed therein, means for heating said electrode, a second electrode inclosed within said vessel, a local circuit having its terminals electrically connected to said electrodes, said local circuit including a source of electromotive force and a signal indicating device, a grid of conducting material inclosed within said vessel and located between said electrodes, and means for conveying the oscillations to be detected to the heated electrode and grid.

14. An oscillation detector comprising an evacuated vessel, two electrodes, one of which is a filament, inclosed within said vessel, means for heating said filament, and a conducting member inclosed within said vessel and interposed between said electrodes.

15. An oscillation detector comprising an evacuated vessel, two electrodes inclosed within said vessel, means for heating one of said electrodes, a grid of conducting material inclosed within said vessel and interposed between said electrodes, a local circuit connecting said electrodes, and a source of electromotive force and signal indicating device in said local circuit.

16. An oscillation detector comprising an evacuated vessel, two electrodes, one of which is a filament, inclosed within said vessel, means for heating said filament, and a grid of conducting material inclosed within said vessel and interposed between said electrodes.

17. An oscillation detector comprising an evacuated vessel, two electrodes inclosed within said vessel, means for heating one of said electrodes, a conducting member inclosed within said vessel and interposed between said electrodes, and a local circuit including a source of electromotive force connecting said electrodes.

18. An oscillation detector comprising an evacuated vessel, two electrodes inclosed within said vessel, means for heating one of said electrodes, a grid of conducting material inclosed within said vessel and interposed between said electrodes, a local circuit including a source of electromotive force connecting said electrodes and a signal indicating device associated with said local circuit.

19. An oscillation detector comprising an evacuated vessel, two electrodes, one of which is a filament, inclosed within said vessel, means for heating said filament, a grid of conducting material inclosed within said vessel and interposed between said electrodes and a local circuit including a source of electromotive force connecting said electrodes.

20. An oscillation detector comprising an evacuated vessel, two electrodes inclosed therein, means for heating one of said electrodes, a conducting member inclosed within said vessel, a closed oscillation circuit, a circuit connecting one element of said oscillation circuit with one of said electrodes and said conducting member, and a condenser in said circuit.

21. An oscillation detector comprising an evacuated vessel, two electrodes inclosed therein, means for heating one of said electrodes, a conducting member inclosed within said vessel, a closed oscillation circuit, a circuit connecting one element of said oscillation circuit with one of said electrodes and said conducting member, a condenser in said circuit, a signal indicating device and a circuit connecting said device with the other of said electrodes and said conducting member.

In testimony whereof, I have hereunto subscribed my name this 21st day of Dec: 1906.

LEE DE FOREST.

Witnesses:

THOMAS I. GALLAGHER.
HANS W. GOETZE.

4. The complete context of the agreement in writing between said plaintiff and the General Electric Company dated November 20, 1919, referred to in paragraph 9 of the bill of complaint herein (it being stipulated that, a copy of said agreement being already on file in this Court, it shall be sufficient for said plaintiff to refer thereto by stating the date of such filing together with the title and docket number of the suit in which it was filed);

5. The complete context of the agreement in writing between the defendant American Telephone & Telegraph Company and said General Electric Company dated July 1, 1920, referred to in paragraph 9 of the bill of complaint herein (it being stipulated that, a copy of said agreement being already on file in this Court, it shall be sufficient for said plaintiff to refer thereto by stating the date of such filing together with the title and docket number of the suit in which it was filed);

[fol. 19] 6. The complete context of the agreement in writing between said plaintiff, the defendant American Telephone & Telegraph Company, said General Electric Company, and Western Electric Company, Inc., dated July 1, 1920, referred to in paragraph 9 of the bill of complaint herein (it being stipulated that, a copy of said agreement being already on file in this Court, it shall be sufficient for said plaintiff to refer thereto by stating the date of such filing together with the title and docket number of the suit in which it was filed);

7. At what date apparatus embodying the inventions of Letters Patent Nos. 841,387 and 879,532 was first manufactured and sold by or on behalf of said plaintiff, which bore the patent notice set forth in paragraph 14 of the bill of complaint herein;

8. What shore stations are referred to in paragraph 15 of the bill of complaint herein and where are or were such shore stations located;

9. In what manner and by what means (including instruments in writing) did the said plaintiff succeed to the business of said Marconi Wireless Telegraph Company of America and acquire certain of its assets as set forth in paragraph 15 of the bill of complaint herein, and the context of said instruments in writing in so far as they refer to the transfer of the business and said assets of said Marconi Company;

10. What shore stations are referred to in paragraph 16 of the bill of complaint herein and where are said shore stations located;

11. What notices are referred to in paragraph 18 of the bill of com- [fol. 20] plaint herein other than that notice specifically set forth in paragraph 17 of the bill of complaint herein;

12. What notice has been marked on the packages or cartons containing apparatus manufactured under Letters Patent Nos. 841,387 and 879,532 as referred to in paragraph 18 of the bill of complaint herein other than the notice specifically set forth in paragraph 17 thereof;

13. What shore wireless telegraph stations of the defendant Independent Wireless Telegraph Company are referred to in paragraph 22 of the bill of complaint herein and where are said stations located;

It is hereby stipulated and agreed, in lieu of the particulars requested in paragraph 16 of the defendant's said notice of motion, that the defendant Independent Wireless Telegraph Company has, since July 1, 1920, and prior to the execution of the bill of complaint herein, purchased or acquired, and used, in the reception of commercial wireless telegraph communications and wireless telegraph messages for pay and profit, three-electrode vacuum tubes of the type known as "Radiotrons," said tubes being marked with a notice consisting of the words "Licensed for Amateur or Experimental Use Only"; that said vacuum tubes were so used at the shore station of the said defendant located within the Southern District of New York; and that the said vacuum tubes were used in an electrical circuit or circuits as illustrated, with the usual symbols, in the circuit diagram annexed hereto and marked "Exhibit A."

[fol. 21] It is hereby further ordered that the said motion of the defendant Independent Wireless Telegraph Company is in all other respects denied;

And it is hereby further ordered that the time of the said defendant within which to answer the bill of complaint herein or otherwise move shall be and the same hereby is extended to a date twenty (20) days subsequent to the filing by said plaintiff of the bill of particulars herein ordered.

Dated, New York, N. Y., August 24, 1923.

Wm. Bondy, U. S. D. J.

Approved as to form: Sheffield & Betts, Solicitors for plaintiff Radio Corporation of America. Pennie, Davis, Marvin & Edmonds, Solicitors for Defendant Independent Wireless Telegraph Company.

(Here follows Exhibit A, Circuit Diagram, marked side folio page 22)

[fol. 23] IN UNITED STATES DISTRICT COURT

[Title omitted]

BILL OF PARTICULARS

The following is the bill of particulars of the plaintiff Radio Corporation of America, filed in pursuance to the motion of the defendant Independent Wireless Telegraph Company argued herein on the 22nd day of May, 1923.

1. Plaintiff intends to rely, at the trial of this cause, upon claims Nos. 4 and 6 of Letters Patent No. 841,387.

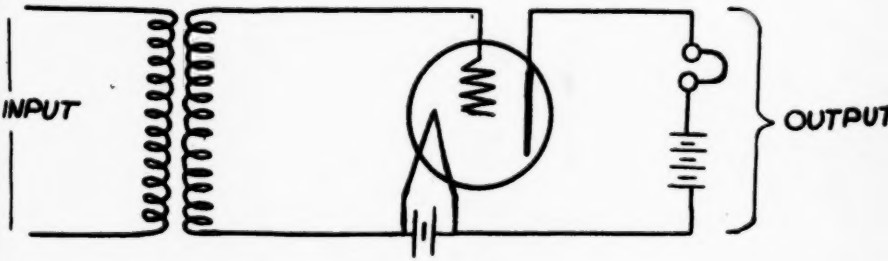

- EXHIBIT A -

2. Plaintiff intends to rely, at the trial of this cause, upon claims Nos. 1, 2, 3, 4, 11, 13, 14, 15, 16, 17, 18 and 19 of Letters Patent No. 879,532.

3. The instruments in writing, assignments, and licenses referred to in paragraph 8 of the bill of complaint herein are identified as follows:

[fol. 24]	Parties	Date	Date & place of recording
(a)	Lee De Forest & George K. Woodworth.	Jan. 24, 1907	Jan. 25, 1907, L. R-75, p. 327.
(b)	George K. Woodworth & De Forest Radio Telephone Company.	Jan. 11, 1908	Jan. 14, 1908, L. X-77, p. 422.
(c)	Resolution of Directors of North America Wireless Corporation.	July 1, 1913	Oct. 16, 1913, L. G-93, p. 95.
(d)	Extract from minutes of special meeting of directors of De Forest Radio Telephone Co.	July 22, 1913	Oct. 16, 1913, L. G-93, p. 95.
(e)	Minutes of Special meeting of Directors of Radio Telephone Company.	July 22, 1913	Oct. 16, 1913, L. G-93, p. 99.
(f)	De Forest Radio Telephone Company. Radio Telephone Co. of North American Wireless Corporation & Sidney S. Meyers.	July 26, 1913	Oct. 16, 1913, L. G-93, p. 102.
(g)	S. S. Meyers & American Telephone & Telegraph Co.	Oct. 6, 1913	Oct. 16, 1913, L. G-93, p. 107.
(h)	Radio Telephone Co. & Radio Telephone & Telegraph Co.	Dec. 20, 1913	Dec. 30, 1913, L. Z-93, p. 285.
[fol. 25] (i)	De Forest Radio Telephone Company, Radio Telephone Co., Radio Tel. & Tel. Co., North American Wireless Corporation, Lee De Forest, Charles M. De Forest & Sidney S. Meyers.	Aug. 7, 1914	Oct. 19, 1914, L. X-95, p. 449.
(j)	S. S. Meyers & American Telephone & Telegraph Co.	Oct. 3, 1914	Oct. 19, 1914, L. X-95, p. 467.
(k)	Radio Telephone Co. & Francis H. McGee.	Aug. 10, 1914	Aug. 26, 1914, L. Y-95, p. 343.
(l)	F. H. McGee & Peter Zimmerman.	Aug. 21, 1914	Aug. 26, 1914, L. Y-95, p. 352.

Parties	Date	Date & place of recording
(m) P. Zimmerman & Radio Telephone & Telegraph Co.	Aug. 24, 1914	Aug. 26, 1914, L. Y-95, p. 361
(n) De Forest Radio Telephone Co. & Radio Telephone & Telegraph Co.	Aug. 25, 1914	Sept. 14, 1914, L. D-95, p. 450.
(o) De Forest Radio Tel. &. Tel. Co., Lee De Forest & Western Electric Co., Inc.	March 16, 1917	March 27, 1917, L. U-102, p. 165.
[fol. 26] (p) Resolution of Board of Directors of De Forest Radio Tel. & Tel. Co.	March 16, 1917	March 27, 1917, L. U-102, p. 178.
(q) Resolution of Stockholders of De Forest Radio Tel. & Tel. Co.	March 19, 1917	March 27, 1917, L. U-102, p. 178.
(r) Western Electric Co., Inc., & American Telephone & Telegraph Co.	May 24, 1917	May 28, 1917, L. H-102, p. 375.

4. A complete copy of the agreement in writing between the plaintiff Radio Corporation of America and the General Electric Company, dated November 20, 1919, referred to in paragraph 9 of the bill of complaint herein, is on file in the Office of the Clerk of this Court in suit entitled Radio Corporation of America et al., vs. J. H. Bunnell & Co., Inc., et al., bearing Equity No. 25/113, said copy having been so filed on March 20, 1923.

5. A complete copy of the agreement in writing between the defendant American Telephone & Telegraph Company and the General Electric Company, dated July 1, 1920, referred to in paragraph 9 of the bill of complaint herein, is on file in the Office of the Clerk of this Court in suit entitled Radio Corporation of America, et al., vs. J. H. Bunnell & Co., Inc., et al., bearing Equity No. 25/113, said copy having been so filed on March 20, 1923.

6. A complete copy of the agreement in writing between the [fol. 27] plaintiff Radio Corporation of America, the defendant American Telephone & Telegraph Company, the General Electric Company, and Western Electric Company, Inc., dated July 1, 1920, referred to in paragraph 9 of the bill of complaint herein, is on file in the office of the Clerk of this Court in suit entitled Radio Corporation of America, et al., vs. J. H. Bunnell & Co., Inc., et al., bearing Equity No. 25/113, said copy having been so filed on March 20, 1923.

7. On information and belief, that apparatus embodying the inventions of Letters Patent Nos. 841,387 and 879,532, which bore the patent notice set forth in paragraph 14 of the bill of complaint herein, was first manufactured and sold by or on behalf of the plaintiff Radio Corporation of America on or about December 1, 1919.

8. The shore stations referred to in paragraph 15 of the bill of complaint herein and their locations are as follows:

Boston, Mass.
South Wellfleet, Mass.
Siasconset, Mass.
Sagaponack, L. I.
Seagate, L. I.
Cape May, N. J.
Philadelphia, Pa.
Baltimore, Md.
Virginia Beach, Va.
Cape Hatteras, N. C.
Savannah, Ga.
Jacksonville, Fla.
Miami, Fla.
Mobile, Ala.
New Orleans, La.
Port Arthur, Texas
Galveston, Texas
Tampa, Fla.
San Pedro, Calif.
San Francisco, Calif.
Eureka, Calif.
Avalon, Calif.
Astoria, Oregon
Seattle, Wash.
Juneau, Alaska
Ketchikan, Alaska
Jualin, Alaska
Chicago, Ill.
Cleveland, Ohio
Grand Haven, Mich.
Ludington, Mich.
Detroit, Mich.
Manistique, Mich.
Milwaukee, Wis.
Manitowoc, Wis.

[fol. 28] 9. Said plaintiff succeeded to the business of the Marconi Wireless Telegraph Company of America and acquired certain of its assets, as set forth in paragraph 15 of the bill of complaint herein, by means of an agreement in writing between said Marconi Company and said plaintiff, dated November 20, 1919; the context of said agreement, in so far as it refers to the transfer of the business and said assets of said Marconi Company, is as follows:

"It is desired that the Radio Corporation acquire all the assets of the Marconi Company, present and future, including its good will and business, rights of action, patent rights and all other rights and property to which it is now or may hereafter become entitled except the 'reserved assets' hereinafter described and the factory at Aldene, New Jersey, and except an amount in cash not exceeding five hundred thousand dollars ($500,000), sufficient to pay out of its surplus a dividend to its stockholders of twenty-five cents ($.25) per share. The assets to be acquired include a number of wireless stations among which are the stations at

New Brunswick, New Jersey,
Belmar, New Jersey,
Marion, Massachusetts,
Chatham, Massachusetts,
Bolinas, California,
Marshall, California,
Kahuku, Territory of Hawaii, and
Kokohead, Territory of Hawaii,

and a number of concessions and contracts (domestic and foreign), patents, patent rights, applications, etc., in various countries, all the stock of the

Wireless Press, Inc., a New York corporation,

[fol. 29] Marconi Telegraph-Cable Company, a New York corporation,

Marconi Telegraph-Cable Company, a New Jersey corporation,

Marconi Telegraph-Cable Company, a Massachusetts corporation,

Marconi Telegraph-Cable Company, an Illinois corporation,

and three-eighths of the stock of the Pan-American Wireless Telegraph and Telephone Company, a Delaware corporation. All claims and rights of action which the Marconi Company possesses being transferred by this present agreement to the Radio Corporation, it is understood and agreed that from such transfer there are reserved each and all of the claims or rights of action as follows and that in any proceeding with respect thereto the Marconi Company may sue in its own name, joining the Radio Corporation as complainant if necessary. The claims or rights of action enumerated below are the 'reserved assets' above referred to:

"a. A claim against the United States Government arising from unlicensed use by and for the Government of the apparatus covered by the patents of the Marconi Company.

"b. A claim now being determined in a suit pending in the United States District Court for the Southern District of New York entitled Marconi Wireless Telegraph Company of America vs. Atlantic Communication Company, on the Fleming patent No. 803,684.

"c. A claim against the Alien Property Custodian and the Treasurer of the United States arising out of the creation of a trust fund out of moneys belonging to the Gessellschaft fur die Drahtlose Tele- [fol. 30] graphie, under Section 9 of the 'Trading with the Enemy Act' by reason of infringement of Fleming patent No. 803,684, and Lodge patent No. 609,154 and Marconi patent No. 763,772.

"d. A claim now being determined in a suit in the United States District Court for the Eastern District of New York entitled Marconi Wireless Telegraph Company of America vs. Atlantic Communication Company, on Lodge patent No. 609,154 and Marconi patent No. 763,772.

"e. A claim now being determined in a suit entitled Marconi Wireless Telegraph Company of America vs. Kilbourne & Clark Manufacturing Company, in the United States District Court for the Western District of Washington, on Marconi patent No. 763,772.

"f. A claim now being determined in a suit entitled Marconi Wireless Telegraph Company of America vs. De Forest Radio Telephone and Telegraph Company in the United States District Court for the Southern District of New York, on Fleming patent No. 803,684.

"g. A claim against the British Government arising from the commandeering, on the outbreak of the European War, of the British stations erected to communicate with the corresponding stations of the America Company.

"The seven foregoing claims are herein collectively referred to as the 'reserved assets.' All the other assets of the Marconi Company which are to be acquired are herein collectively called the 'Marconi Assets.'

"The Marconi Company hereby transfers the Marconi assets to the Radio Corporation free and clear of all mortgages, liens, charges and encumbrances, and free of debt except current accounts payable."

[fol. 31] 10. The shore stations referred to in paragraph 15 of the bill of complaint herein and their locations are as follows:

Siasconset, Mass.
New York City (Bush Terminal).
New London, Conn.
Cape May, N. J.
San Francisco, Calif.
Los Angeles, "

In addition to the above mentioned stations, shore stations were formerly operated at 47 West Street, New York City, and at New Brunswick, N. J., both of which were discontinued about two years ago.

11. The notices referred to in paragraph 18 of the bill of complaint herein other than the notice specifically set forth in paragraph 17 thereof are those set forth in paragraph 12 of this bill of particulars.

(N. B.—Paragraph 14 of defendant's motion for a bill of particulars having been denied, copies of the "warning notices and statements" therein referred to are not intended to be set forth herein.)

12. On information and belief, the following are correct copies of all notices that, since July 1, 1920, have been placed on the packages or cartons in which vacuum tubes for radio purposes have been sold or disposed of by the plaintiff Radio Corporation of America under Letters Patent Nos. 841,387 and 879,532, for amateur or experimental use:

(1) "Audion vacuum tube for wireless telegraphy and telephony. Amateur use only for reception and amplification."

[fol. 32] (2) "Licensed only for amateur or experimental uses in radio communication. Any other use will be an infringement."

(3) "The tube herein contained is licensed for amateur or experimental use only."

(4) "Notice

"This device is not licensed except for amateur, experimental and entertainment radio use as set forth and to the extent indicated in the current issue of the catalogue of Radio Corporation of America. No express or implied license is granted under any patent owned by the Radio Corporation of America, or under which it is licensed to use or sell this device as an element or part of any combination or organization except as expressly set forth in said catalogue."

The patent license, referred to in notice No. (4) above set forth as being in the catalogue of the Radio Corporation of America, reads as follows:

"Patent License

"(1) Purchasers of tubes, grid leaks, transformers, condensers, or other parts, or of sets are not licensed by the Radio Corporation of America under any patents owned by the Radio Corporation of America, or under which it is licensed to use the same for commercial purposes. The sole license the purchaser of any such part or set obtains by the purchase thereof is to use it for amateur and experimental radio use involving no business feature and including broadcast reception of news and music and other entertainments but not broadcast transmission.

"(2) Purchasers of parts are given no license either express or [fol. 33] implied by reason of such purchase to assemble or make up sets or parts of sets which sets or parts of sets (as distinguished from the separate parts) infringe patents under which the Radio Corporation of America holds rights. The purchaser of a part is licensed by such purchase to use such part only and is not licensed under any patent covering a combination or organization composed of such part and other parts. The right under any patents relating to such a combination or organization to assemble parts into complete sets or to assemble in part such sets is reserved by the Radio Corporation of America, except to the extent that it from time to time permits amateurs to assemble sets under certain conditions as provided below.

"(3) To meet and develop the interest of amateurs in the radio art, such amateurs are, until further notice, authorized under the patents under which the Radio Corporation of America has the right to grant licenses, to assemble and use sets (but only for amateur and experimental radio purposes as above defined in section (1), provided the tubes forming elements of, or used with, such sets have been sold by the Radio Corporation of America or such other persons, if any, as have been authorized by it to manufacture and sell the same for use in the United States of America, and provided that such amateur does not use any assembled or partially assembled set, but himself assembles the various distinct parts.

"(4) No license under any such patent covering a combination or organization of elements is granted to replace any tubes in any set sold by the Radio Corporation of America or assembled under license from it, with other tubes not sold by the Radio Corporation of America."

[fol. 34] 13. On information and belief, the shore wireless telegraph stations of the defendant Independent Wireless Telegraph Company referred to in paragraph 22 of the bill of complaint herein, together with their locations, are as follows:

New London, Connecticut;
Easthampton, Long Island, New York;

East Moriches, Long Island, New York;
Babylon, Long Island, New York;
35 Water Street, New York City, New York.

Plaintiff Radio Corporation of America hereby prays leave to apply to this Court for leave to amend this bill of particulars as to paragraph 12 hereof if said plaintiff should hereafter learn of any additional notices, etc., that have been used as therein set forth.

Dated, New York, N. Y., August 28, 1923.

Radio Corporation of America, by Sheffield & Betts, Its Solicitors. L. F. H. Betts, of Counsel.

[fol. 35] AGREEMENT REFERRED TO IN PARAGRAPH 3(o) OF PLAINTIFF'S BILL OF PARTICULARS

Whereas, the De Forest Radio Telephone and Telegraph Company, a Delaware corporation, herein called the "De Forest Company," (being the same corporation formerly named "Radio Telephone and Telegraph Company"), represents that it owns and controls the entire right, title and interest (subject only to such rights as were granted to Sidney S. Meyers, his heirs and assigns, by certain agreements dated July 26, 1913, and August 7, 1914, respectively, which rights are now held by the American Telephone and Telegraph Company) in, to and under certain United States patents and applications for United States patents and inventions recited or intended to be recited in the list hereto attached and marked "Schedule A"; and

Whereas, the De Forest Company further represents that it owns certain rights or interest in, to or under certain other United States patents and applications for United States patents recited or intended to be recited in the list hereto attached and marked "Schedule B"; and

Whereas, the Western Electric Company, Incorporated, a New York corporation, herein called the "Western Company," is desirous of acquiring rights in all the inventions and rights to patents owned or controlled by the De Forest Company, and in all the patents and applications included in or intended to be included in the said Schedules A and B, and also in certain inventions (and the United States [fol. 36] patents that may be granted therefor, which may be made or conceived by Lee De Forest, during the period of seven years from and after the date hereof;

Now, in consideration of One Dollar ($1.00) and other good and valuable considerations paid to the said De Forest Company by the said Western Company, receipt whereof is hereby acknowledged, the said De Forest Company hereby, on behalf of itself and its successors, legal representatives and assigns, grants and agrees to grant to the Western Company, a license (free of royalties or other payments other than those herein specified) to make, use, install, operate and lease, and to sell or otherwise dispose of to others for sale, installa-

tion and operation, apparatus and systems embodying or made or operating in accordance with the following inventions: (1) All inventions owned or controlled by the said De Forest Company or to which it now is or may hereafter be legally or equitably entitled by reason of any existing agreements, under which it has or may have the right to transfer or grant licenses as herein expressed, among which inventions are specifically included (without excluding others) those enumerated in Schedules A and B; and (2) any and all inventions relating to apparatus, methods or systems adapted for use in wire or radio signaling or communication, or relating to the audion or other vacuum, rarified gas or vapor electric discharge device, or relating in anywise to electrical translating devices (such, for example, as oscillation generators, relays, repeaters, amplifiers, detectors, rectifiers, power limiting devices, X-ray apparatus, etc.), which may [fol. 37] be made or conceived by Lee De Forest during the period of seven years from and after the date hereof.

The said license is granted and to be granted under United States patents only, and for the full terms of the said patents granted or to be granted, and the license is granted for all transferable rights of said De Forest Company of any kind or nature whatsoever in said inventions, patents and applications, except the rights hereinafter expressly reserved to itself by the De Forest Company. The said license granted and to be granted to the Western Company is exclusive except for the aforesaid rights now held by the American Telephone and Telegraph Company and except for the rights expressly reserved herein by the De Forest Company.

The De Forest Company reserves to itself the following rights:

(1) Non-exclusive, assignable rights to make, use and sell for the synthetic production of music under such of the patents and applications of Schedules A and B as were filed prior to August 14, 1914;

(2) Exclusive, assignable rights to make, use and sell for the synthetic production of music its inventions covered by its patents, issued or to be issued for inventions disclosed in its applications filed subsequent to, and not prior to, August 14, 1914;

(3) Exclusive, non-transferable, personal rights, with respect to the generation of oscillating or pulsating currents for sending pur- [fol. 38] poses in radio-communication, to grant non-exclusive, non-transferable licenses to and to make apparatus for and sell apparatus to the Marconi Wireless Telegraph Company of America and any and all companies that may be owned or controlled by it under patents Nos. 1,201,270, 1,201,271 and 1,218,195 and applications Ser. Nos. 17,225, 27,771, 31,856, 41,332, 48,948, 48,949, 52,176, 75,928, 99,283, 104,074, 104,075, 150,221 and 150,027; such licenses or sales to the said Marconi Wireless Telegraph Company of America or to any of said companies that may be owned or controlled by it shall not, however, carry by implication or otherwise the right to use any of the other inventions covered by the patents and applications in said Schedules A and B; such exclusive rights to become non-exclusive if and when the said Marconi Wireless Telegraph Company of Amer-

ica grants a license to the De Forest Company under the Fleming patent No. 803,684 and the said right and any license granted thereunder to terminate with the expiration of said Fleming patent:

(4) Non-exclusive, non-transferable, personal rights with respect to radio-communication, under all the patents, applications and inventions included in this agreement, for the following purposes only:

(a) To make for and sell to the United States Government for its use;

(b) To make for and sell to amateurs for use solely by said amateurs:

[fol. 39] (c) To make for and sell to private users who do not, for pay, transmit or receive messages or establish communications, for use only in establishing communication between different offices or departments of the same business;

(d) To make and sell for use on ships which do not for pay transmit or receive messages or establish communications;

(e) To make and use for radio distribution of news and music;

(f) To make and sell for use receiving apparatus for the reception of said news and music but not for use in receiving messages for pay;

(g) To make, use and sell to others for use in the reproduction of words or music from telegraphone and graphophone records;

It is understood and agreed that, except with respect to apparatus furnished to the United States Government and to the said Marconi Wireless Telegraph Company of America, no apparatus shall be sold or leased by the De Forest Company under its reserved rights, except upon written agreement by the purchaser or lessee, as the case may be, that neither said apparatus as a whole, nor any part thereof shall be used in the commercial transmission or reception of messages for pay, or used by others than the original purchaser or lessee, or used for any purposes other than radio-communication.

The term "radio" as used herein is intended to be limited to such transmission of signals, communications or electrical effects as is [fol. 40] accomplished without the use of wire or other physical connection, except the natural media in space, between sending and receiving stations.

It is understood and agreed that all apparatus made, sold, leased, delivered, installed or used by the De Forest Company shall be permanently and conspicuously marked as patented, together with the date (day and year) of the patent or patents covering the same, and shall also be permanently and conspicuously marked with words, satisfactory to the Western Company, indicating the sole use to which it is to be put.

It is understood and agreed that the Western Company, its successors, legal representatives and assigns, and the De Forest Company may, respectively, institute and conduct suits against others for infringement of any of said patents within the fields in which

it possesses rights, but all of such suits shall be conducted at the expense of the party bringing them, which party shall be entitled to retain any judgment recovered in any such suits.

The De Forest Company covenants with and warrants to the Western Company, its successors and assigns, that said Schedule A is a complete list of all United States patents and applications for United States patents and inventions which it owns or controls, but if any such patents, applications or inventions are omitted from said Schedule A, they shall be added thereto as soon as the omission is discovered, and shall be deemed to be included therein. And the De Forest Company covenants with and warrants to the Western [fol. 41] Company, its successors and assigns that it owns and controls the entire right, title and interest in, to and under each and all of the patents, applications for patents and inventions listed or intended to be listed in said Schedule A, free and clear of any adverse assignment, grant, mortgage, license and every other encumbrance, except such rights as were granted as aforesaid to the said Sidney S. Meyers and are now held by said American Telephone and Telegraph Company and except a license heretofore granted to the Atlantic Communication Company (a New York corporation).

The De Forest Company further covenants and warrants that said Schedule B is a complete list of all United States patents, applications for United States patents and inventions (other than those recited in said Schedule A) in which it has any title or interest or in respect to which it has any transferable rights; but if any such patents, applications or inventions (except such as should be added to Schedule A) are omitted from said Schedule B they shall be added to the latter as soon as the omission is discovered, and shall be deemed to be included therein.

The De Forest Company further covenants and agrees that it will, whenever requested, and without further consideration, execute and deliver and cause to be executed and delivered all such further licenses and papers as the legal counsel of the Western Company may advise are necessary or convenient to perfect the license to the Western Company, its successors and assigns, herein conveyed or intended or agreed to be conveyed.

[fol. 42] The De Forest Company hereby gives to the Western Company the non-revocable right to examine and take copies of all of its applications now pending in the United States Patent Office, including those applications enumerated in said Schedules A and B, and all its pending applications filed or which may be filed in the United States Patent Office in the name of Lee De Forest for inventions conceived at any time prior to seven years from the date hereof; and the Commissioner of Patents is hereby authorized to permit the said Western Company to have access to said applications in accordance herewith. And the De Forest Company furthermore agrees to promptly furnish to the Western Company the serial number and date of filing of all such applications, and copies of all the Patent Office records thereof, including specifications, drawings, amendments and office actions.

It is understood and agreed that the Western Company, its

successors and assigns may transfer to others, in whole or in part, the rights granted by this instrument, and may assign rights hereunder, or grant licenses to various persons, firms or corporations for the several uses to which the inventions are applicable.

It is understood and agreed that the acceptance of this license by the Western Company shall not be construed as granting or implying the grant or surrender by it of any rights or licenses whatever under its patents granted or to be granted.

In witness whereof the parties hereto have caused this instrument to be executed on the 16th day of March, 1917, by their proper [fol. 43] officers thereunto duly authorized.

De Forest Radio Telephone and Telegraph Company, by Lee De Forest, President. Attest: Chas. Gilbert, Treasurer. Western Electric Company, Incorporated, by H. B. Thayer, President. Attest: Geo. C. Pratt, Secretary.

I, Lee De Forest, as an individual and as a director and stockholder in the De Forest Radio Telephone and Telegraph Company which has executed the foregoing instrument, hereby approve, ratify and confirm the licenses granted in the foregoing instrument, and also all provisions of that instrument; and to the extent of my present or future interest in, or control over, the said patents, applications and inventions, I for myself, my heirs, executors, legal representatives and assigns, hereby join and agree to join in the licenses above granted and agreed to be granted and further agree promptly to disclose to said Western Company all inventions which may be made or conceived by me within the period of seven years from the date hereof and to execute and deliver such licenses and other papers which may be reasonably necessary to vest in the Western Company [fol. 44] the rights which are herein granted or agreed to be granted.

Lee De Forest.

State of New York,
County of New York, ss:

On this 16th day of March, 1917, personally appeared before me Lee De Forest, personally known to me and known to me to be one of the persons who executed the foregoing instrument, and he acknowledged to me that he executed the same, and that the same constitutes his free act and deed for the uses and purposes therein set forth.

Jacob Satin, Notary Public, New York County, No. 24. Register No. 8059. Commission expires March 30, 1918.

[fol. 45] Instrument Referred to in Paragraph 3 (r) of Plaintiff's Bill of Particulars

The undersigned, the Western Electric Company, Incorporated, a New York corporation, in consideration of One Dollar ($1.00) and other good and valuable consideration to be paid by the American

Telephone and Telegraph Company, a New York corporation, the receipt of which is hereby acknowledged, has sold, assigned and transferred, and does hereby sell, assign and transfer to the said American Telephone and Telegraph Company, its successors, legal representatives and assigns, all the right, title and interest of the said Western Electric Company, Incorporated, in, to and under a certain agreement dated the 16th day of March, 1917, and executed and acknowledged by the De Forest Radio Telephone and Telegraph Company, the said Western Electric Company Incorporated and Lee De Forest, the said agreement relating to patents and inventions and being recorded in Liber U102, pp. 165-170 of Transfer of Patents of the United States Patent Office.

In witness whereof, the said Western Electric Company Incorporated has caused this instrument to be executed on the 24th day of May 1917, by its proper officers thereunto duly authorized.

Western Electric Company, Incorporated, by H. B. Thayer, President. Attest: Geo. C. Pratt, Secretary. (Seal.)

[fol. 46] AGREEMENT REFERRED TO IN PARAGRAPH 4 OF PLAINTIFF'S BILL OF PARTICULARS

Agreement made this 20th day of November, 1919, between General Electric Company, a New York corporation, hereinafter called the General Company, and Radio Corporation of America, a Delaware corporation, hereafter referred to as the Radio Corporation.

Recitals

A. The General Company has developed various inventions relating to, or applicable to, radio work and other communication work.

B. The General Company is under obligation to certain foreign companies to give them for their territory respectively exclusive rights to its various inventions and discoveries and to the business of selling General Electric products. Some of these companies are substantially controlled by the International General Electric Company, a New York, corporation hereinafter referred to as the International Company.

C. The Radio Corporation proposes to establish, maintain and operate radio stations, and cable and wire lines and stations, and to deal in, lease and maintain radio devices, and desires to utilize in such work the various inventions now controlled by the General Company and which may hereafter be controlled by it.

Article I.—Definitions

1. Radio purposes is defined as the transmission or reception of [fol. 47] communications, telegraphic, telephonic or other, by what are known as electromagnetic waves, but not by wire.

2. Radio devices are defined as comprising:

(a.) Devices useful only in radio purposes.

(b.) Devices especially adapted to radio purposes but capable of other uses, such, for example, as the Alexanderson alternator with accessories or the pliotron, except where the same are sold licensed only for uses other than radio uses in which case the same are not to be regarded as radio devices hereunder.

3. The expression "devices" shall include apparatus, devices, systems, connections and methods.

Article II.—Licenses

1. Reserving to itself and its controlled companies, present and future, respectively, personal licenses, transferable only to the successors to their business or part thereof and divisible only as their business is divided, to use for their own communication or other purposes for convenience or to save expense, but not for profit, the General Company hereby grants to the Radio Corporation an exclusive, divisible license to use and sell as well as a non-exclusive, indivisible license to make only when, and to the extent that, the General Company is not in a position to supply the desired device with reasonable business promptness (the right to use and sell being limited to the use and sale of apparatus purchased from the General [fol. 48] Company or with its written consent, so far as the General Company is from time to time in condition to supply the same with reasonable business promptness) for radio purposes under all patents, applications for patents, inventions and rights or licenses under or in connection with patents which the General Company now owns or controls, or which it may acquire during the term hereof except those acquired by purchase and referred to below.

2. The General Company also grants to the Radio Corporation a non-exclusive non-transferable license to use, but not to make or sell (with the same limitations) for wire communication purposes under all patents, applications, inventions, rights and licenses which it now owns or controls or which it may acquire during the term hereof by inventions of its employees.

3. For the purposes hereof the inventions, patents and rights of the General Company are taken as including those of the International Company as well as the following corporations, namely:

Australian General Electric Company,
China General Edison Company, Inc.,
Compania General Electric do Brazil,
South African General Electric Company, Ltd.,
Cia General Electric Sudamericana, Inc.,
Mexican General Electric Company.

4. The Radio Corporation grants to the General Company the exclusive, divisible right to make and to sell radio devices to the

[fol. 49] Radio Corporation only as well as the exclusive, divisible right to make, use and sell devices other than radio devices, under all its patents and applications for patents, inventions and rights or licenses unler or in connection with patents which the Radio Corporation now owns or controls, or which it may acquire during the term hereof except as far as is provided below in the case of certain such acquired by purchase. The Radio Corporation grants the General Company and its controlled companies, present and future, non-exclusive licenses transferable only to successors to their business or parts thereof, divisible only as their business is divided, to use for their own communication or other purposes for convenience or to save expense but not for profit under all the patents which the Radio Corporation now owns or controls or which it may acquire during the term hereof from the General Company or by inventions of its own employees or through contracts which it now has.

5. The said licenses are all to run for the terms for which the patents are or may be granted, reissued or extended, and are subject to royalty only in so far as such royalties are payable to others by virtue of the contracts by which the party granting the licenses acquired or shall acquire the right to grant the same, and only at a rate not greater than that paid by such party.

6. Where in any case a party does not own or control a patent but has lawful power to grant rights or licenses thereunder to the other for part or all of its field or territory it shall do so subject to the conditions hereof.

[fol. 50] 7. In case the General Company shall acquire by purchase from others patents, patent applications, or rights or licenses under or in connection with patents, useful for or applicable to radio purposes or wire communication, and in case the Radio Corporation similarly acquires such patents, patent applications, or rights or licenses, the party making the acquisition will offer to the other to bring the same within the scope of this contract on payment of a fair proportion of the price actually paid or to be paid therefor. This shall not apply in the case of any patent, patent application, right or license secured by the Radio Corporation from or through the Marconi Wireless Telegraph Company of America, Marconi's Wireless Telegraph Company, Limited, Compagnie Generale de Telegraphie Sans Fils, or others with whom the Radio Corporation may have relations similar to its actual or proposed relations with any of said companies; all such are to be treated as though they were not acquired by purchase.

8. The General Company has sold its inventions for certain countries to companies other than those mentioned in Section 3 of this article. All covenants of the General Company with respect to such countries are subject to the present rights of the companies holding such inventions. As such rights revert to the General Company they shall pass under the operation of this contract without further consideration.

9. Each company agrees to continue the present practice of the [fol. 51] General Company of requiring those employees considered likely to make inventions along this line of work to assign inventions to it; it being understood that each company shall use its best efforts to carry out this provision, but if due care and diligence are exercised neither company shall be liable in damages for failure to carry it out.

10. As soon as is reasonably possible after the filing by or on behalf of a party hereto of a United States patent application, rights to or under which should pass to the other party, the party filing the application shall transmit a copy thereof to the other party with a statement of its filing date and shall notify the other party of the countries foreign to the United States in which it has decided to file and will file applications to cover the invention of such application. The other party may then suggest that applications should be filed in additional foreign countries in which the first party has the right to file. If and so far as the first party does not within thirty (30) days after such suggestion agree to file in such other foreign countries the other party may file proper applications for protecting such invention in such other foreign countries, and take patents thereon in its own name at its own expense. Before either party intentionally drops an application or patent of any country, rights to or under which should pass to the other hereunder, it shall notify the other party in which case such other party may continue the prosecution of the application or continue the life of the patent in question at its own expense, [fol. 52] being entitled in such case to an assignment thereof.

11. In case a right, application or patent is transferred by one party to the other in accordance with the provisions of Section 10 of this article, the party with which such right, application or patent originated shall be entitled to its full rights thereunder as though such patent had originated with and had been taken out by the other party subject to any royalty or other payment required to be made to an outsider in accordance with this agreement.

12. The admission of validity implied in the acceptance of licenses and assignments hereunder is limited to the field and terms for which such licenses exist.

13. The General Company empowers the Radio Corporation to release the United States Government from any and all claims arising from past infringement by the Government of any radio patents which the General Company now owns or under which it has power to grant such release, provided that this can be done in a contract otherwise satisfactory to the General Company.

Article III.—Restrictions on Sale of Apparatus

1. The General Company agrees that it will not sell or dispose of any radio devices whatever covered by patents, rights under which are granted or agreed to be granted herein, for use in the United States except to fill orders now on hand, and except to the United

[fol. 53] State Government in cases where the Government insists on purchasing directly from the General Company (in which case the profits from such sales over the price of such devices to the Radio Corporation hereunder shall be paid to the Radio Corporation). The General Company further agrees that it will not sell or dispose of for use outside the United States any radio devices whatever covered by patents, rights under which are granted or agreed to be granted herein, except as it may be required to do so by existing contracts with others than the Companies specifically named in Section 3 of Article II hereof and except for its own use or for the use of the Radio Corporation. This reservation is not intented to enlarge the scope of the licenses granted in Article II hereof.

Article IV.—Sale of Apparatus

1. The Radio Corporation agrees to purchase from the General Company all radio devices covered by patents, rights under which are granted or agreed to be granted herein, which the General Company is from time to time in a position to supply with reasonable business promptness for use in, or which are used in, the business and operation of the Radio Corporation and its licensees and customers.

2. The General Company agrees to produce or cause to be produced such patented devices of good quality, workmanship, and material with reasonable business promptness on the written order of the Radio Corporation.

[fol. 54] 3. The basis for determining the price charged by the General Company to the Radio Corporation shall be cost plus 20%, except that for all articles complete in themselves which are purchased by the General Company from outside manufacturers and which form a necessary part of the complete device supplied by the General Company, the price charged by the General Company to the Radio Corporation shall be cost plus 10% for handling charges.

4. The basis for determining cost shall be in accordance with the "Standard Accounting and Cost System for the Electrical Manufacturing Industry," as approved by the Federal Trade Commission, January 27, 1917.

5. Terms of payment shall conform to the standard terms of the General Company current at the time of placing the order.

6. If the Radio Corporation in any particular instance wishes the General Company to make a definite and firm price for such radio devices, and the General Company consents to make such firm price, such firm price upon acceptance by the Radio Corporation shall be substituted in such instance or instances for the cost plus 20% arrangement above mentioned.

7. All prices mentioned above shall be f. o. b. factory.

8. Standard material not specially designed for radio purposes is to be sold to the Radio Corporation at standard prices and on standard

[fol. 55] terms of payment but at the lowest price at which such standard material is sold in like quantities to any other customer of the General Company for use in the United States of America, and if at any time material, apparatus or supplies especially designed for radio purposes shall be sold by the General Company to its other customers for other uses than radio purposes in an amount greater than that taken by the Radio Corporation, the price at which such material, apparatus or supplies shall be sold to the Radio Corporation shall be the lowest price at which such material, apparatus or supplies are sold in like quantities to any other customers of the General Company for use in the United States of America. In determining such lowest price under this Section 8 no account shall be taken of sales:

(1) To those corporations in which the General Company may own a substantial amount of stock;

(2) Where the General Company sells material on a schedule, such material is to be billed to the Radio Corporation according to such schedule;

(3) Where the General Company has a lawful contract not to sell material below a certain price, such material is not to be billed to the Radio Corporation for a less price;

(4) To the United States Government or any of its departments.

9. It is agreed that the Radio Corporation shall not resell patented articles except as a part of the radio system.

[fol. 56] 10. The Radio Corporation agrees not to lease, sell or dispose of devices bought of the General Company, where the General Company or one of the companies mentioned in Section 3 of Article II hereof would not be free to sell such devices. It being understood that the rights of the Radio Corporation are only for radio purposes as above defined, the Radio Corporation agrees to use care not to enter with any patented device, process or system into the field of the General Company or to encourage or aid others to do so, and specifically that in selling radio devices it will use such precautions by contract of sale, restricted license notices, etc., as may be necessary or advisable to prevent its customers from acquiring (by purchase from it of devices or otherwise) licenses to use the same for purposes of which the Radio Corporation has no right to grant such licenses. The General Company agrees to observe similar precautions in selling apparatus and devices especially adapted to radio work but capable of other uses.

11. The General Company agrees to sell the Radio Corporation such patented communication devices as it may be in position to supply other than radio devices on the same terms, but only for the use of the Radio Corporation and not for resale or lease or other disposal and not exclusively.

Article V.—Alexanderson Alternator

1. The Radio Corporation agrees to purchase from the General Company and the General Com- agrees to sell and to deliver f. o. b. [fol. 57] factory to it, as fast as they can reasonably be constructed and prior to January 1, 1922, twelve (12) Alexanderson, alternators complete with accessories in accordance with specifications attached hereto and marked "Exhibit B" at the special price of one hundred twenty-seven thousand dollars ($127,000) apiece. Spare alternators or other incomplete spare equipments may be substituted at prices to be agreed upon provided that the total purchases hereunder aggregate in price the price of twelve Alexanderson alternators with their accessories. In consideration for such agreement on the part of the General Company, the Radio Corporation agrees to issue and deliver to the General Company three hundred four thousand eight hundred ($304,800) shares of its preferred stock, but subject to the provisions of Article VI hereof.

Article VI.—Sale of Materials

1. The Radio Corporation proposes to purchase from the Marconi Wireless Telegraph Company of America, hereinafter referred to as the Marconi Company, all its property used or useful in connection with its manufacturing business, except the factory at Aldene, New Jersey. In case this purchase is made the Radio Corporation agrees forthwith to sell and does sell the property so purchased to the General Company, such sale to take effect immediately on the purchase of the same by the Radio Corporation, including all drawings, blueprints and material for manufacture and unfinished parts [fol. 58] on hand or on order as of the date of the Radio Corporation's acquisition of the same, and any factory plants, tools, machinery and dies which it may acquire from the Marconi Company, but not including the publishing plant of the Wireless Press, Inc., nor the building and real estate at Seattle, Washington, which latter will no longer be used for factory purposes. The accounts receivable are to be collected and the accounts payable are to be paid by the Radio Corporation.

2. The General Company agrees to pay for the property thus transferred by paying for the unfinished parts, work in progress and material on hand to be manufactured at actual cost of the same plus twenty per cent (20%), which amount is to be ascertained by two appraisers, one appointed by the General Company and one appointed by Mr. Edward J. Nally. In case they disagree the matter shall be referred to Mr. S. Roger Mitchell, or other public accountant satisfactory to both parties, whose decision shall be final.

3. In case the Radio Corporation shall acquire, prior to January 1, 1922, the factory plants, lands, etc., of the Marconi Company, at Aldene, New Jersey, as set forth in Exhibit C hereto attached, it agrees forthwith to sell the same to the General Company and the General Company agrees to buy the same for five hundred thousand dollars ($500,000).

4. The payments by the General Company to the Radio Corporation under this Article and deliveries of preferred stock to the Gen- [fol. 59] eral Company in payment for Alexanderson alternators and their accessories in accordance with Article V hereof, are to proceed as follows: At the time of taking over the unfinished parts, work in progress and material on hand a special account is to be set up between the General Company and the Radio Corporation, in which account is to be charged against the General Company the value of such unfinished parts, work in progress and material on hand, ascertained as above; if and when, prior to January 1, 1922, the Radio Corporation acquires the Aldene factory and transfers it to the General Compny, its price, five hundred thousand dollars ($500,000) is to be charged in the same account against the General Company. As and when the Alexanderson alternators and their accessories sold at the special price referred to above are shipped to the Radio Corporation, the price thereof is to be credited to the General Company on such account, until such credits aggregate one million five hundred twenty-four thousand dollars ($1,524,000). At any time when such account shows a balance in favor of the General Company the General Company may demand and shall then receive preferred stock of the Radio Corporation at par to any amount demanded not exceeding such credit balance, the par value of such stock to be charged to it in such special account; and if at any time the balance of said account is in favor of the Radio Corporation, the General Company shall liquidate such balance by surrender to the Radio Corporation of preferred stock of the Radio Corporation of a par value equal to the amount of such balance. Such special account shall be [fol. 60] entirely independent of all other accounts between the parties.

5. The Radio Corporation agrees to place forthwith with the General Company orders which will exhaust and consume said unfinished parts, work in progress and material; unfinished parts, work in progress and material not covered by such orders may be regarded by the appraisers as scrap in case the General Company shall find itself unable profitably to utilize the same.

6. The General Company agrees to fill the orders so to be placed on it and to bill the same to the Radio Corporation; in making up price of the articles so billed in accordance with Article IV hereof the price of the unfinished parts, work in progress and material taken over and inventories shall be taken as the price actually paid for the same by the General Company as above set forth, the additional work and material being charged on the basis of Article IV hereof.

Article VII.—Expert Advice and Technical Information

1. The General Company agrees that it will from time to time permit the Radio Corporation to have and will assist it in obtaining full information concerning inventions, patents and the patent situation of the General Company in the radio field. The Radio Corporation engages reciprocally to do the same for the General Company.

[fol. 61] 2. The General Company agrees upon request to furnish the Radio Corporation suitable plans for buildings, lay-out of machinery, antennae, etc., for use by the Radio Corporation hereunder, and if desired a man or men to supervise the construction and erection of such buildings, and the erection and installation of such machinery, etc., and also such engineers and experienced men as the General Company can reasonably spare and the Radio Corporation may reasonably require in the organization, management and development of the business of the Radio Corporation, and to give the Radio Corporation and those whom the Radio Corporation may designate from time to time all information in regard to technical and engineering but not manufacturing matters which it may possess from time to time and which the Radio Corporation may reasonably require for the conduct of its radio business hereunder, and further agrees to assist the Radio Corporation in every reasonable way to the end that the Radio Corporation shall have whenever needed, in its operations hereunder, the benefits of the widespread experience of the General Company. The Radio Corporation agrees to pay in each case the reasonable cost of furnishing such information and service, but not any part of the cost of acquiring the information except as the same may properly be charged as part of the development cost of apparatus which the General Company sells to the Radio Corporation.

3. Each party agrees to give the other at cost of supplying the same information and advice in connection with patent matters in its field.

[fol. 62] 4. The Radio Corporation agrees to give full information to the General Company on the same terms, and further agrees to afford the engineering representatives of the General Company the fullest possible facilities, consistent with the reasonable operation of the Radio Corporation, for the experimenting and for developing and testing new apparatus, devices and inventions.

Article VIII.—Term and Termination

1. This agreement shall continue until January 1, 1945, at which date it shall expire. As soon as is reasonably practicable after that licenses shall be granted as provided above under all patents to issue on patent applications which are then or may hereafter be filed in any country on inventions made or conceived by employees of either company up to the date of termination.

2. The radio Corporation shall after January 1, 1945, be licensed under all patents referred to in this agreement so far as the General Company now has or may hereafter acquire the right to grant such license to the extent necessary to enable it to manufacture for its own use hereunder, but not for lease, resale or other disposal, radio devices which it is unable to purchase of the General Company in accordance with the terms of Article IV hereof.

Article IX.—Further Assurances

1. The parties agree to execute such further instruments as may reasonably be necessary for carrying out the purposes hereof.

[fol. 63] Article X.—Controlled Companies

1. This agreement shall be binding upon and inure to the benefit of the parties hereto and their successors and their controlled companies, present and future. The British Thomson-Houston Company, Limited, and the Tokyo Electric Company, Limited, shall not for the purpose hereof be regarded as controlled companies of the General Company.

Article XI

1. Inasmuch as the General Company is not willing to turn over its patents, patent rights and licenses for any definite sum of money, but is willing to transfer such patents, patent rights and licenses only for a considerable interest in the profits to be derived from the use by the Radio Corporation of such patents, patent rights and licenses, it is therefore understood and agreed that in the event of the taking over of the Radio Corporation by any superior authority all right, title and interest of the Radio Corporation in any patent, patent right or license herein granted or agreed to be granted by the General Company to the Radio Corporation shall cease and shall be reassigned and shall revert to the General Company as of the date of such taking over except to the extent provided below. If instead of taking over the Radio Corporation the Government takes over its radio stations in any field and/or territory, except in and for time of war or public danger, the result shall follow so far as [fol. 64] concerns that field and/or territory. But this action shall in no way affect the rights of Marconi's Wireless Telegraph Company, Limited, or of Shielton, Limited, as set forth in the "Radio Corporation and British Marconi Company Principal Agreement"; such rights shall be reserved from any such reassignment by the Radio Corporation for the benefit of Marconi's Wireless Telegraph Company, Limited.

In testimony whereof the parties hereto have caused these presents to be executed and their corporate seals to be hereunto affixed by their proper officers thereunto duly authorized at New York City the day and year first above written.

General Electric Company, by E. W. Rice, Jr., President.

Attest: J. W. Elwood, Asst. Secretary. Radio Corporation of America, by Frederick C. Bates, President. Attest: Charles H. Wheeler, Secretary.

STATE OF NEW YORK,
County of New York, ss:

On this twentieth day of November, in the year one thousand nine hundred and nineteen, before me personally came Frederick C. Bates, to me known, who, being by me duly sworn, did depose and [fol. 65] says that he resides at Brooklyn, New York; that he is the President of the Radio Corporation of America, the corporation described in and which executed the above instrument, and also before me personally came Charles J. Wheeler, to me known, who being duly sworn did depose and say that he resides at Montclair, New Jersey; that he is the Secretary of the Radio Corporation of America, the corporation described in and which executed the above instrument; that he knows the seal of the said corporation; that the seal affixed to the said instrument is such corporate seal; that it was so affixed by order of the board of directors of the said corporation, and both the said Bates and the said Wheeler did depose and say that they had signed their names to the said instrument by order of the board of directors of the said corporation.

Gertrude Chandler, Notary Public, New York County, No. 386. New York County Register's No. 10324. Commission expires March 30, 1920.

STATE OF NEW YORK,
County of New York, ss:

On this twentieth day of November, in the year one thousand nine hundred and nineteen, before me personally came E. W. Rice, Jr., to me known, who, being by me duly sworn, did depose and say that he resides at Schenectady, New York; that he is the President of the General Electric Company, the corporation described in and which executed the above instrument, and also before me personally came J. W. Elwood, to me known, who, being by me [fol. 66] duly sworn, did depose and say that he resides at Van Hornesville, New York; that he is the Assistant Secretary of the General Electric Company, the corporation described in and which executed the above instrument; that he knows the seal of the said corporation; that the seal affixed to the said instrument is such corporate seal; that it was so affixed by order of the board of directors of the said corporation, and both the said Rice and said Elwood did depose and say that they had signed their names to the said instrument by order of the board of directors of the said corporation.

Gertrude Chandler, Notary Public, New York County, No. 386. New York County Register's No. 10324. Commission expires March 30, 1920.

EXHIBIT B

Item 1. High frequency motor generator set consisting of 1 600 H. P., 8-pole, quarter-phase, 2.200 volt, 900 r.p.m. induction motor

direct connected through a 3.1 gear to an alternator capable of generating directly frequencies up to 27,000 cycles.

Item 2. 1 High frequency transformer adapting the voltage of the alternator for the antenna.

Item 3. 1 Speed regulator for maintaining constant speed corresponding to wave lengths between 11,500 and 15,000 metres.

[fol. 67] Item 4. 1 Magnetic amplifier for controlling the output of the alternator.

Item 5. 1 Switchboard for controlling the operation of the driving motor and auxiliaries.

Item 6. 1 Operator's control board to control operation of the high frequency circuits.

Item 7. 1 Set of multiple tuning accessories for the antenna, equal in number to those now installed at New Brunswick, N. J.

Item 8. 1 3 Unit motor generator set consisting of a 440 volt, 3 phase induction motor direct connected to a 15 Kw. 125-250 volt D. C. generator.

Item 9. 2 Motor driven water pumps providing circulating water for alternator bearings and armature.

Item 10. Full set of instructions and drawings suitable for installation and operation purposes.

The Company proposes to furnish apparatus and devices for a complete, continuous-wave radio transmitting system for hand key operation, exclusive of building, foundations, towers for antenna, water and power supply.

The items enumerated above constitute the principal features of this system.

Multiple tuning of the antenna increases the efficiency of radiation. [fol. 68] The Company's guarantee as to operation is based on this fact and the use of the multiple tuned antenna. Item No. 7 covers apparatus that will be used to accomplish multiple tuning. The equipment may be used without multiple tuning, but when so used the efficiency of the system will be decreased.

The motor and gear are designed for a maximum speed corresponding to a waive length of 11,500 metres and variable speed control is provided for operation at longer waves. The system to be furnished is designed to operate at wave lengths between 11,500 metres and 15,000 metres and is guaranteed, when used with multiple tuned antenna, to produce a charging current of 400 amperes at 12,000 metres in an antenna of the New Brunswick, New Jersey, type. The antenna charging current is to be measured when the key is pressed and the equipment shall be capable of operating continuously for a period of twenty-four consecutive hours with telegraph control.

Exhibit C

The land and real estate owned by the Marconi Company at Aldene in the State of New Jersey together with the factory buildings, wireless towers and structures located on such land, the said

land being located between the fork of the Lehigh Valley Railroad and the Central Railroad of New Jersey on the east and bounded on the north by Westfield Avenue, together with the tools and machines in all such structures.

[fol. 69] AGREEMENT REFERRED TO IN PARAGRAPH 5 OF PLAINTIFF'S BILL OF PARTICULARS

Agreement made this first day of July, 1920, between the General Electric Company, a New York corporation (herein called the General Company), and the American Telephone & Telegraph Company, a New York corporation, herein caled the Telephone Company.

Whereas, the General Company is engaged in the manufacture and sale in the United States of apparatus and systems for the generation, distribution and utilization of electricity for light, heat, power, traction and associated purposes, and in the manufacture and sale of a general line of electrical and power apparatus, machines and appliances, and, directly and through affiliated companies, is engaged in the purchase of apparatus and devices of various kinds from others and in the sale thereof; and is also engaged in the manufacture and sale of wireless apparatus and appliances; and

Whereas, the Telephone Company and its Associated Companies are engaged in the operation of telephone and telegraph systems; and

Whereas, each party is in possession of information, patents and inventions applicable to, and has research organizations engaged in investigations bearing upon, not only its own business but also the business of the other party; and

Whereas, various patents or applications for patents of the parties [fol. 70] are involved in interference with each other in the United States Patent Office; and

Whereas, the restrictions upon each party imposed by the patent rights of the other and the uncertainties arising out of interferences have tended to, and if permitted to continue will, hamper and delay progress in the development and production of wire and wireless telephone and telegraph apparatus and systems; and

Whereas, the effective and prompt development of the arts in question can be secured only by the free and frank co-operation and exchange of information between the parties, which cannot well take place if improvements and knowledge resulting from one party's co-operation with the other party may without its consent be made available in its field to the use of others;

Now in consideration of the premises and the mutual agreements herein contained, it is agreed as follow:

ARTICLE I.—Definitions

For the purpose of this agreement the following terms are defined as follows:

"Wire telephony" is the art of communicating or reproducing sound waves (created, directly or indirectly, by the voice or by muscial instruments) by means of electricity, magnetism or electro-magnetic waves, variations or impulses conveyed or guided by wires, [fol. 71] and includes all generating, measuring, switching, signalling, and other means or methods incidental to or involved in such communication.

"Wireless telephony" is to be taken as meaning the same as the above, except that the waves, variations or impulses are radiated through space.

"Wire telegraphy" is the art of communicating messages by code signals (such as the Morse Code, for example) by means of electricity, magnetism or electro-magnetic waves, variations or impulses conveyed or guided by wires, and includes all generating, measuring, switching, signalling and other means or methods incidental to or involved in such communication, but does not include such devices as annunciators, elevator signals, engine room telegraphs, etc.

"Wireless telegraphy" is to be taken as meaning the same as "wire telegraphy," except that the waves, variations or impulses are radiated through space.

"Power purposes" are defined as including all prime movers and their accessories and all generation, use measurement, control and application of electricity for light, heat and power, but does not include any communication purposes.

"Household devices" are electric or electrically operated devices designed primarily for domestic use, but do not include devices for communication purposes.

"Trans-oceanic" communication shall be understood to include all communication between two continents, or between a continent and [fol. 72] an island more than one hundred miles from its shores; islands within one hundred miles of the shores of a continent being considered parts thereof. North America, including the Panama Canal Zone and all of Central America north thereof, is to be considered as one continent, and South America and all Central America south of the Panama Canal Zone as another. This definition does not include communication between ships, or between ships and shore.

'The United States Government" shall be understood to include not only the Federal Government but also the Governments of the Philippines, Porto Rico and other federal possessions, present or future; but shall not include any municipal, county or state government.

"Train dispatching" is telegraphic or telephonic conveyance of train orders or operating information between the office of a train dispatcher or similar official and way stations, or other points along the line of way, or railway vehicles (with or without incidental provision for operating at will in an emergency, and not automatically, signals, brakes, stops and switches) for controlling the movements of trains or other automotive vehicles.

"Railway signalling" is the operation of signals, switches, brakes, stops, etc., controlling the movements of trains or other automotive

vehicles, controlled by or in accordance with train or vehicle movements or track conditions, including block signalling, cab signals [fol. 73] and train stops. It does not include train dispatching as above defined.

Any question arising as to the meaning or application of the foregoing definitions shall be settled by arbitration, as hereinafter provided.

Article II.—The Patents Included in This Agreement

The licenses provided for herein are granted and agreed to be granted under all patents, and rights to or under patents, of the United States now or hereafter during the term of this agreement owned or controlled by the parties hereto, and under all such patents hereafter issued upon inventions now or hereafter during said term so owned or controlled, and to the extent to which the parties have or may have the right to grant licenses, excepting as otherwise specified in connection with the several grants hereinafter contained, and excepting such patents and inventions as may be excluded from the operation of this agreement in the following manner:

A list of all United States patents under which it now holds transferable rights shall be furnished by each party to the other within sixty days from the date of this agreement. Such lists shall separately identify those patents, and shall also include those applications, as to which rights, if granted hereunder, would be restricted in scope or would involve continuing obligations not implied by law. Copies of all contracts creating such restrictions or obligations shall, upon request, be furnished by each party to the other. Thereupon, [fol. 74] and within six months after the receipt of the list to be furnished as aforesaid, each party may in writing advise the other as to the patents and applications described in such list, furnished by the other, which (or the patents to issue on which) it desires to exclude from this agreement; and no licenses are granted by this agreement under any patents so excluded. Each party shall thereafter, at such periods as may be agreed upon, or whenever requested by the other party, furnish to such other party like lists of subsequent patents and applications upon request therefor like copies of contracts; and each party may, within six months after the receipt of any such list, advise the other in writing as to the patents and applications described in such list which (or the patents to issue on which) it desires to exclude from this agreement; and no licenses are granted by this agreement under any patents so excluded.

Article III.—Scope of Licenses

All of the licenses herein granted are, unless otherwise expressed in connection with the several grants, licenses to use methods and processes, and to make, use, lease, sell or otherwise dispose of apparatus, machines, devices, appliances and systems embodying the inventions of the several patents, in the field in which the licenses are granted.

But no rights are granted to either party to manufacture, or to have manufactured, under patents under which it receives licenses [fol. 75] herunder, apparatus of the character at the time manufactured by the other party, except in factories owned or operated by one or the other of the parties hereto, or by their controlled companies, without the written consent of the party granting such licenses.

Article IV.—Reservations and Exception to which the Licenses are Subject

1. Each party reserves a non-exclusive right, under its own patents, to manufacture for and sell to the United States Government wireless devices, apparatus and systems, and to grant to that Government non-exclusive licenses to make or have made for it any wireless devices, apparatus and systems; but such devices, apparatus and systems are licensed to be sold to the Government only for Governmental and not for commercial uses or for toll, and not for resale, and the non-exclusive licenses which may be granted to the Government shall similarly be limited.

2. Each party reserves, under its own patents, rights in the fields and for the uses with reference to which it receives licenses under patents of the other party.

3. No licenses are granted by either party with reference to the manufacture and sale of wire or cable for the transmission of electric power or telephone or telegraph currents.

4. No licenses are granted to the Telephone Company for electric lamps or other lighting devices (except non-exclusive licenses with reference to telephone and telegraph switch board signal lamps and [fol. 76] ballast lamps), nor for the working of tungsten. But the Telephone Company is licensed to use, in the fields for which it receives licenses hereunder, tungsten purchased from the General Company, or from others having the right to make and sell tungsten, and to make, use, sell or lease (for such fields only) devices embodying such tungsten. The General Company agrees to sell and deliver such tungsten for such purposes, in wire or other practicable form to be specified by the purchaser from time to time, on the terms specified in Article X hereof.

The Telephone Company agrees that, on all sales of telephone and telegraph switchboard lamps or ballast lamps, hereunder, to others than the Associated Companies of the Bell System, it will pay to the General Company a royalty of 2% on the net sales price thereof.

5. The licenses hereinafter granted to the Telephone Company, in so far as they cover rights to sell or lease "carrier current," wireless or vacuum tube devices for use on electric railroads, are limited to the sales or leases of said devices to the railroads; all sales of such devices to be installed on electric cars or electric locomotives, as a

part of the original construction and equipment thereof, shall be through the General Company only.

Article V.—Licenses Granted

Subject to the foregoing reservations, each party grants and agrees to grant to the other the following licenses in the following fields of use:

[fol. 77] 1. Government Uses.—Each party grants to the other non-exclusive licenses, to which all exclusive licenses herein granted are subject, to make any and all wireless apparatus and systems for and to sell the same to the United States Government, but only for governmental and not for commercial or toll uses and not for resale.

2. Wireless Telegraphy.—(a) The General Company grants to the Telephone Company non-exclusive licenses in the field of wireless telegraphy for its own communication or for purposes of convenience or to save expense in connection with its commercial operation of wire telegraph and wire and wireless telephone systems, but not for profit or for transmission of messages for the public.

(b) Subject to the foregoing, the Telephone Company grants to the General Company exclusive licenses in the field of wireless telegraphy.

3. Wire Telegraph.—(a) The Telephone Company grants to the General Company non-exclusive licenses to make for its own operation and to operate wire telegraph systems, other than trans-oceanic; but no licenses are granted with reference to operation on lines leased to others than parties hereto or their subsidiary companies to which rights hereunder may be extended in accordance with subdivision (b) of Section 3 of Article VI; and no licenses are granted with reference to trans-oceanic wire telegraphy.
[fol. 78] (b) Subject to the foregoing, the General Company grants to the Telephone Company exclusive licenses in the field of wire telegraphy on land, and over ocean cables not more than one hundred miles in length, and between the main body of the United States and Cuba; but no licenses are granted with reference to other trans-oceanic wire telegraphy.

4. Wireless telephony.—(a) The Telephone Company grants to the General Company non-exclusive licenses in the field of wireless telephony for its own communication or for purposes of convenience, or to save expense in connection with its commercial operation of wireless telegraph systems, but not for profit or for transmission of messages for the public.

(b) The Telephone Company grants to the General Company licenses (exclusive, except that the Telephone Company reserves exclusive rights for the uses and to the extent specified in subdivision (c) of this Section (4) in the field of trans-oceanic wireless telephony, such licenses being limited, so far as concerns service on this

continent for the public or for others than the General Company, to rendering such service through only the Telephone Company's wire or wireless telephone systems, such limitation to exist so long as the Telephone Company remains in a position to and does supply that service. The General Company is, however, licensed to bring trans-oceanic wireless telephone messages by wire telephony to, and transmit them from, a central or transfer point at a distance from its wireless stations (one such point for each pair of trans-oceanic sta- [fol. 79] tions) and the Telephone Company agrees that at such point it will establish communication with its system, but the Telephone Company shall not be required to accept any such point more than five miles from the nearest telephone central exchange of the Bell system. All service for the public shall be through the Telephone Company's system, and shall be advertised as service of the Telephone Company through stations of the General Company when and so long as the General Company maintain facilities for the trans-oceanic wireless telephone service.

Joint through rates and the division rates shall be agreed upon, it being agreed in principal that the General Company is entitled to its reasonable tolls between the central or transfer point and the distant country (including the amount, if any, paid to the foreign company with which communication is had) and that the telephone Company is entitled to its reasonable tolls between the central or transfer point and the destination or sending point in the United States.

(c) The General Company grants to the Telephone Company licenses (exclusive, except that the General Company reserved exclusive rights for the uses and to the extent specified in foregoing subdivision (b) in the field of trans-oceanic wireless telephony, such licenses being limited, so far as concerns service for the public or for others than the telephone Company, to rendering such service through only the General Company's systems for trans-oceanic communication. But if and so long as the General Company is not [fol. 80] prepared to and does not remain in a position to and does not supply such service, the Telephone Company may establish wireless stations for rendering such service, after giving the General Company reasonable notice and opportunity to do so, and shall have the right to continue to render such service through all such stations established by it except in so far as the General Company shall elect to cooperate in rendering such service, or any portion thereof, in which event the General Company shall take over those stations, or such of them as it may elect, at the then cost of reproduction less depreciation. While the trans-oceanic service is being rendered through the General Company's stations, the advertising and the division of rates shall be as provided in foregoing subdivision (b) of this Section 4.

(d) The Telephone Company grants to the General Company.

(1) Exclusive licenses to make, use, lease and sell wireless telephone apparatus and systems for communication by and between

airplanes, airships, ships and other automotive devices, except railway vehicles. The General Company is granted non-exclusive licenses to establish transmitting and receiving stations for communication with the foregoing, but is given no right to connect with any public service telephone system. The Telephone Company is licensed, but is under no obligation, to establish or maintain means by which such wireless telephone communication may be had with and through the Telephone Company's telephone system, and the Telephone Company is under no obligation to permit [fol. 81] such communication. If, however, the Telephone Company shall establish, maintain or permit such wireless telephone communication through stations of third parties, other than the United States Government, it shall do the same with respect to the General Company's stations on at least as favorable terms, including distribution of tolls, and engineering requirements. In case, at any time, the General Company has established such a station as is referred to in this paragraph, and the Telephone Company shall elect to co-operate or render such wireless service in any substantial part of the same territory, it shall purchase the said station of the General Company at the then cost of reproduction less depreciation.

(2) Non-exclusive licenses to establish and maintain transmitting stations for transmitting or broadcasting news, music and entertainment from a transmitting station to outlying points, and licenses to make, use, sell and lease wireless telephone receiving apparatus for the reception of such news, music and entertainment so broadcasted. For the protection of the General Company under the license which it receives in this paragraph, it is agreed that the Telephone Company has no license under this agreement to make, lease or sell wireless telephone receiving apparatus except as part of or for direct use in connection with transmitting apparatus made by it; and for the protection of the Telephone Company under the licenses hereinbelow granted to it, it is agreed that the General Company has no license to equip wireless telephone receiving apparatus sold under [fol. 82] this paragraph with transmitting apparatus, or to sell, lease or otherwise dispose of transmitting apparatus for use in connection with receiving apparatus sold under this paragraph.

(3) Exclusive licenses to make, use, lease and sell all wireless telephone apparatus for amateur purposes.

(4) Exclusive license to make, use, lease and sell all wireless telephone apparatus (but not for public service) where the business use thereof is incidental (as for example for farmers), or where at least one of the stations is portable and is intended to be moved from place to place (as for example in lumbering operations) or where such wireless apparatus brings communication to new points not at the time served by the Telephone Company.

(5) Reserving to itself an exclusive license to make, use, sell and lease all wireless telephone apparatus to electric light, electric power and electric traction companies for connection with wire or wire-

less public service telephone communication systems and receiving from the General Company a similar exclusive license of the same scope under the General Company's patents, the Telephone Company grants the General Company exclusive licenses to make, use, sell and lease all wireless telephone apparatus for electric light, electric power and electric traction companies but only for the use of such companies and not for the use of the public, nor for toll, nor for the operation of a selective train dispatching system and not for connection with any public service telephone system.

[fol. 83] (e) The General Company grants to the Telephone Company,

(1) subject only to subdivisions (a), (b) and (c) and paragraph (1) of subdivicion (d) of this Section, exclusive licenses in the field of wireless telephony to make, use, lease and sell all wireless telephone apparatus connected to or operated as a part of a public service telephone communication system, whether wire or wireless.

(2) subject to all the foregoing exclusive licenses in the field of wireless telephony to make, use and sell for all business, public service and commercial uses of such character as might be served by leased wires, as for example brokers' offices, business houses, manufacturing plants, gas and water companies, mining companies, etc.

(f) It is further agreed that in the fields of the exclusive licenses granted by paragraphs (3), (4) and (5) of Section (d) above and in Paragraph (2) of Section (e) above, and for any wireless telephone uses not specified herein, each party will on application of the other party grant a license to the other party on reasonable terms for each specific installation for which such other party desires to manufacture and dispose of such wireless telephone apparatus; the license fee to be fixed with due regard to the benefits derived by the licensee and the disadvantages suffered by the licensor in the granting of such license.

5. Wire Telephony.—(a) The Telephone Company grants to the General Company licenses (exclusive, except that the Telephone [fol. 84] Company reserves non-exclusive rights) to make and sell (but not to lease) to electric light, electric power and electric traction companies apparatus for so-called "carrier current" telephone communication over wires, or partly over wires and partly across wireless gaps, but in each instance only for the use of such companies and not for the use of the public, nor for toll, nor for operation of a selective train dispatching system, and not for connection with any public service telephone system.

(b) Subject to the foregoing, the General Company grants to the Telephone Company exclusive licenses in the field of wire telephony on land, and over cables not more than one hundred miles in length, and between the main body of the United States and Cuba; licenses are granted by each party to the other with reference to other transoceanic wire telephony, such licenses being of the character and

subject to the limitations and provisions expressed in foregoing subdivisions (b) and (c) of Section 4, with reference to trans-oceanic wireless telephony.

6. Power Purposes and Household Devices.—The Telephone Company grants to the General Company exclusive licenses in the fields of power purposes, household devices, and distant actuation and control by wireless for other than communication purposes. This grant is made with a reservation in so far as concerns patents for inventions relating to business of the general character which any controlled Company of the Telephone Company now conducts as jobber, and any extensions of that business along similar lines. With refer- [fol. 85] ence to such patents (except those covering articles of the General character which such Company now purchases from the General Company, or its affiliated companies, or sells as agent for the same), the Telephone Company reserves under its own patents (but is granted no license under the patents of the General Company) the non-exclusive right for such controlled companies to make apparatus and devices embodying the inventions of said patents, or have them made for them, and to sell them in the said jobbing business.

7. Railroad Signalling, X-Ray Devices, Radio Goniometry.—The Telephone Company grants to the General Company exclusive licenses in the fields of railroad signalling (other than train dispatching), X-Ray devices and appliances associated therewith, and radio goniometry.

8. Train Dispatching.—Subject to the foregoing, the General Company grants to the Telephone Company exclusive licenses in the field of train dispatching.

9. Submarine Signalling, Scientific and Therapeutic Apparatus, Shop Expedients, and other Applications.—Each party grants to the other, non-exclusive licenses in the following fields:

Submarine signalling.

Scientific apparatus for use of laboratories, colleges and scientific societies, as distinguished from commercial use.

[fol. 86] Wireless apparatus for use of professional investigators (as distinguished from amateurs) for experimental purposes only.

Therapeutic apparatus other than X-Ray devices and appliances.

Shop tools, appliances and processes, but only for the production of apparatus and devices embodying inventions which the grantee is licensed to make and use hereunder.

All applications, not herein otherwise specified, of inventions pertaining or applicable to or to the use of vacuum tubes, and to generating (directly or from other currents), modifying, amplifying, transmitting or receiving electro-magnetic waves, variations or impulses for other than power purposes, including instruments and their records for producing music and other sounds for amusement or artistic purposes, with the right to transmit the sound by wire telephony throughout a building.

Article VI.—Provisions with Reference to Foregoing Licenses

1. Whenever licenses granted under the terms of this agreement are based upon rights requiring the payment of royalties or other deferred payments, measured by the use made of the invention, the party accepting such licenses shall make payments measured by its use of the invention at the same rate and upon the same terms as those agreed to be made by the party originally acquiring the rights.

2. The foregoing licenses shall continue respectively for the terms [fol. 87] of the several patents issued or to be issued under which they are granted and agreed to be granted and shall not be limited by the term of this agreement.

3. (a) The Telephone Company may grant sub-licenses under its standard form of license contract (a copy of which is now delivered to the General Company) to such operating companies, as are now or may from time to time be operating under such form of contract. The provisions of this sub-division (a) shall apply to any changed form of license contract provided that, as changed, it grants rights in the fields of the General Company no broader than those granted by the present form.

(b) Subject to the foregoing subdivision (a), each party hereto may assign or grant sub-licenses under any of the rights granted hereunder, provided that in each instance the assent of the other party is first obtained.

(c) No disposition by either party of rights hereunder acquired by it, shall relieve such party of any of its obligations under this agreement, or restrict the rights of the parties hereto in operating under or modifying this agreement.

4. Each party agrees that, so far as it is enabled so to do, it will, in disposing of devices embodying inventions pertaining or applicable to vacuum tubes, or to generating, modifying, amplifying, transmitting or receiving electro-magnetic waves, or other devices or material the unrestricted sale of which would deprive the other party of rights to which it is entitled hereunder, use such precautions, by [fol. 88] contracts, restricted licenses or otherwise as may be necessary or advisable in order to prevent its customers or others from acquiring (by acquisition of devices from it or otherwise) licenses to use the same which the party disposing thereof has no right to grant.

5. The admission of validity implied in the acceptance of licenses hereunder is limited to the field for which such licenses exist.

6. One or the other of the parties hereto having already parted with rights under its inventions, present and future, in most of the Foreign countries, it is agreed that the parties will co-operate with each other and with their foreign affiliated companies who may desire licenses under the inventions of the other party to the end that exchanges of licenses may be effected in such countries. No licenses under foreign patents are now granted or are to be implied; but the licenses herein

granted under United States patents include the right to manufacture and sell for uses abroad. Each party agrees not to export to any country in which the other party has an affiliated company, apparatus purchased from such other party which such other party could not itself so export, in view of existing contract obligations, after notice of such obligations and without first securing a written waiver thereof.

7. Each party represents that in its best judgment it has no outstanding obligations which would prevent it from entering into the agreements and from granting the licenses herein expressed. If, however, it is found that there are such conflicting obligations, the [fol. 89] present agreement is made subject to the right to fulfill those obligations.

Article VII.—Interferences

The parties agree to use reasonable endeavors to settle, without litigation, interferences now pending or which may arise involving inventions within the scope of this agreement.

Article VIII.—Acquisition of Patent Rights

Neither party shall acquire from others rights to or under United States patents or inventions, or rights to use secret processes, applicable to the fields of the other party, of such limited character that the other party does not, by the operation of this agreement receive licenses thereunder of the scope and within the respective fields herein set forth, unless the party proposing to acquire such rights shall first have given the other party an opportunity to be represented in the negotiations and thereby to acquire rights for its field.

Article IX.—Co-operation and Exchange of Information

1. Each party agrees that it will, from time to time during the term of this agreement, freely permit the other to have all information in its possession which it may have a right to disclose with [fol. 90] reference to devices, apparatus, systems or methods applicable to the uses of the other party as herein defined, it being agreed that any secret process so disclosed shall be maintained in secrecy by the party to whom it is disclosed. Blue prints, etc., shall be furnished at the cost of preparing the same. Each party shall at all reasonable times have access (through a reasonably limited number of accredited representatives who are regular employees under obligation to assign inventions to their employer), to the laboratories, factories and wireless stations of the other, to the end that development work may be expedited and rendered the more effective.

Each party shall, with reference to inventions owned or controlled by it and under which the other party is entitled to rights hereunder, endeavor to obtain or permit and aid the other to obtain proper patents thereon.

2. Publicity with reference to trans-oceanic telephony shall be joint, and shall recognize that the parties hereto, or their associates, have contributed equally to such work.

Engineering representatives shall be assigned by each of the parties to co-operate in the carrying out of the further work necessary for the development of trans-oceanic wireless telephony. In case trans-oceanic telephone service is given from the plant of the Telephone Company through the stations of the General Company, these engineering representatives shall co-operate in the design of the apparatus and systems for this service, it being recognized that such systems and apparatus must be so designed as properly to fit in with the [fol. 91] systems of the General and Telephone Companies respectively.

Each party shall afford the engineering representatives of the other the fullest possible facilities, consistent with the reasonable operation of the other, for experimenting and for developing and testing apparatus and systems for use in trans-oceanic telephony, and each shall at all times be given such an opportunity to make such tests, experiments and observations in the trans-oceanic stations of the other as do not conflict with the service then being rendered by such stations, and each party shall afford to the other such facilities for test, experimentation and observation on ships as it may be able to extend.

3. In the operation of wireless and "carrier-current" communication, the parties, shall co-operate to the end that interference with the operations of either party, due to the operations of the other, shall be minimized, it being recognized that the available wave lengths are limited.

Article X.—Purchases as Between Parties

It is recognized that each party has and will normally continue to have facilities for manufacturing certain apparatus or parts thereof which may be required by the other party under its licenses hereunder, and that a duplication of such facilities may be wasteful and uneconomical. Each party agrees that it will upon request manufacture for and sell and deliver to the other, with reasonable business [fol. 92] promptness, on receipt of orders from time to time and at favorable prices not to exceed those charged to others (except controlled companies) purchasing in like quantities for use in the United States, such apparatus and parts as the former is engaged in manufacturing from time to time and as the latter may desire for use under the licenses granted by this agreement.

Article XI.—Litigation

Each party shall have the exclusive right to bring suits for the infringement in the fields in which its licenses are herein expressed as exclusive (and the General Company may bring such suits for infringement in the field of trans-oceanic wire and wireless telephony)

joining in any such suit the patent owner or the party which has acquired from the patent owner the right to sue thereunder.

Neither party shall bring suit for infringement of patents against the other party, or against the distributors and jobbing houses owned by or affiliated with either party, because of sales by such party, or by its (or its controlled companies) distributors or jobbing houses, or devices made in the United States of America, by others than the parties hereto, it being agreed that the remedy in case of any such infringement shall be only by suit against the manufacturer of these devices.

[fol. 93] Article XII.—Releases

Each party reserves to itself the right to deal with the United States Government with reference to settlement for past use of its inventions in telephone and telegraph systems and apparatus.

Subject to the foregoing, each party releases the other and the vendees and users of apparatus or systems made by it, from all claims growing out of past infringement of patents, by reason of the manufacture, use and sale of such apparatus and systems by the other party, and its resale or use by such vendees and users.

Article XIII.—Arbitration

In case any differences under this agreement (except in respect of interferences or priority of rights to inventions or patents) shall arise which the parties are unable to adjust between themselves, either party may, by notice in writing served on the other, designate one arbitrator and call upon the other to designate a second arbitrator within thirty days after the receipt of such notice; and the party receiving such notice agrees so to designate an arbitrator. The two arbitrators so designated shall promptly select a third arbitrator. The matter in dispute shall be submitted to the three arbitrators so selected and the parties agree that the concurring decision of any two of the above mentioned three arbitrators shall be final [fol. 94] and binding upon them. Each party shall pay its own expenses, including the fees of its arbitrator, and the fees and expenses of the third arbitrator shall be paid one-half by each party.

Article XIV.—Termination of Agreement

(a) This agreement may, at any time, be terminated by mutual consent of the parties, in which event all licenses granted herein up to the date of such termination shall become non-exclusive and shall continue to the ends of the terms of the patents.

(b) Unless previously terminated as above provided, the duration of this agreement shall be ten years from the date hereof, but shall automatically continue in force thereafter until cancelled on three years' written notice given after the expiration of said ten years' period, by one party to the other party.

(c) Upon any termination of this agreement (except under the provisions of Subdivision (a) of this Article XIV) all licenses, expressed herein as exclusive shall remain exclusive during the life of the several patents.

Article XV.—Further Assurances

The parties agree to execute and deliver such further instruments as may reasonably be necessary for carrying out the provisions and purposes of this agreement.

[fol. 95] ARTICLE XVI.—Successors

This agreement is binding upon and shall inure to the benefit of each of the parties hereto and their several successors in business, except that either party may transfer or dispose of any part or parts of its business not involving the grant of any licenses under this agreement, and in such cases this agreement shall be binding upon or inure to the benefit of the successor to that part of the business so transferred.

In witness whereof, the parties hereto have caused this instrument to be executed on the day and year first above written, by their proper officers thereunto duly authorized.

General Electric Company, by E. W. Rice, Jr., President. Attest: J. W. Elwood, Assistant Secretary. (Seal.) American Telephone & Telegraph Company, by H. B. Thayer, President. Attest: A. A. Marsters, Secretary. (Seal.)

[fol. 96] AGREEMENT REFERRED TO IN PARAGRAPH 6 OF PLAINTIFF'S BILL OF PARTICULARS

Whereas, a license agreement was entered into between the General Electric Company, a New York corporation herein called the General Company, and the American Telephone & Telegraph Company, a New York corporation herein called the Telephone Company, dated July 1, 1920, and

Whereas, the General Company desires to extend rights thereunder to the Radio Corporation of America, a Delaware Corporation (herein called the Radio Company) pursuant to the provisions of an agreement of November 20, 1919, between the General and Radio Companies; and

Whereas, the Telephone Company desires to extend rights thereunder to the Western Electric Company, Incorporated, a New York Corporation (herein called the Western Company) pursuant to the provision of an agreement of February 6, 1882 as modified by agreement of April 8, 1908, between the Telephone and Western Companies; and

Whereas, the Radio and Western Companies, respectively, desire to obtain such rights, but in accordance with Subdivision (b) of

Section 3, Article VI of said agreement of July 1, 1920, such rights may be extended only with the assent of both parties to said agreement.

Now, it is agreed as follows:

1. The General Company may extend to the Radio Company, and the Telephone Company may extend to the Western Company (pursuant to the above mentioned agreements of November 20, 1919, February 6, 1882, April 8, 1908, or otherwise), any of the said rights [fol. 97] reserved and acquired by each, respectively, under this present agreement and under said agreement of July 1, 1920, whether or not expressed in said agreement of July 1, 1920, as personal or non-exclusive or non-assignable, except any right to terminate under the provisions of Article XIV of said agreement.

2. The Western Company hereby grants and agrees to grant to the General Company under the present and future patents of the Western Company, rights of the same character and scope, and for the same fields and subject to the same limitations and conditions, as the rights granted to the General Company in and by said agreement of July 1, 1920; provided, however, that all rights herein granted and agreed to be granted are subject to rights, which the Western Company hereby reserves for itself and for the Telephone Company and their several successors in business, of the same character and scope and for the same fields and subject to the same limitations and conditions as the rights reserved by the Telephone Company in and by said agreement of July 1, 1920. And the Western Company hereby assumes towards the General Company (and the Telephone and Western Companies assume towards the Radio Company, to the extent that the General Company, under the provisions of Clause 1 hereof, extends or may hereafter extend its rights to the Radio Company) obligations similar to the obligations assumed by the Telephone Company towards the General Company in and by said agreement of July 1, 1920, except that the Western Company assumes no obligations as to operation of telephone or telegraph systems unless [fol. 98] and until it shall engage in the commercial operation of such systems.

3. The Radio Company hereby grants and agrees to grant to the Telephone Company, under the present and future patents of the Radio Company, rights of the same character and scope, and for the same fields and subject to the same limitations and conditions, as the rights granted to the Telephone Company in and by said agreement of July 1, 1920; provided, however, that all rights herein granted and agreed to be granted are subject to rights, which the Radio Company hereby reserves for itself and for the General Company and their several successors in business, of the same character and scope for the same fields and subject to the same limitations and conditions as the rights reserved by the General Company in and by said agreement of July 1, 1920. And the Radio Company hereby assumes towards the Telephone Company (and the General and Radio Companies assume towards the Western Company, to the

extent that the Telephone Company, under the provisions of Clause 1 hereof, extends or may hereafter extend its rights to the Western Company) obligations similar to the obligations assumed by the General Company towards the Telephone Company, in and by said agreement of July 1, 1920, except that the Radio Company assumes no obligations as to manufacturing or selling articles or devices which it is not from time to time engaged in commercially manufacturing.

4. This agreement shall terminate at the same time the said agreement of July 1, 1920, terminates.

[fol. 99] In witness whereof, the parties hereto have caused this instrument to be executed, in quadruplicate, on the first day of July, 1920, by their proper officers thereunto duly authorized.

General Electric Company, by E. W. Rice, Jr., President. Attest: J. W. Elwood, Asst. Secretary. (Seal.) Radio Corporation of America, by E. J. Nally, President. Attest: C. J. Ross, Secretary. (Seal.) American Telephone & Telegraph Company, by H. B. Thayer, President. Attest: A. A. Marsters, Secretary. (Seal.) Western Electric Company, Inc., by H. A. Halligan, Vice-President. Attest: George C. Pratt, Secretary. (Seal.)

[fol. 100] IN UNITED STATES DISTRICT COURT

[Title omitted]

NOTICE OF MOTION

GENTLEMEN: Please take notice that on the call of the Motion Calendar to be held at the Post Office Building, City of New York, New York, on Tuesday October 1st, at ten o'clock A. M. of that day, or soon thereafter as counsel can be heard, we shall present to the Court a Motion for an Order dismissing the bill of complaint herein as more fully pointed out in the accompanying Motion, copies of the motion papers being attached hereto.

Yours, etc., Pennie, Davis, Marvin and Edmonds.

Office and Post Office Address, 165 Broadway, Borough of Manhattan, City of New York.

Dated September 20, 1923.

To Sheffield and Betts, Solicitors for Plaintiff Radio Corporation of America, 27 Cedar Street, New York City.

[fol. 101] IN UNITED STATES DISTRICT COURT

[Title omitted]

MOTION TO DISMISS

Now comes the defendant, Independent Wireless Telegraph Company, by its solicitors Pennie, Davis, Marvin and Edmonds, and upon the bill of complaint herein, the bill of particulars furnished by the plaintiff and upon certain license agreements between the plaintiff and the defendant American Telephone and Telegraph Company as identified in the bill of complaint and disclosed by the bill of particulars, moves this honorable court for an order dismissing the bill of complaint herein, all upon the following grounds:

That the De Forest Radio Telephone and Telegraph Company, the owner of the patent in suit, has not joined in this litigation as a party plaintiff by duly signing and verifying the bill of complaint herein, and the plaintiff Radio Corporation of America is not such a licensee under the patents as to permit it to sue alone in its own name, in the name of the owner of the patents in suit, or to sue in [fol. 102] the name of the owner of the patents joining itself as a licensee under the patents.

Pennie, Davis, Marvin and Edmonds, Solicitors for Defendants Independent Wireless Telegraph Co. William H. Davis, Willis H. Taylor, Jr., of Counsel.

IN UNITED STATES DISTRICT COURT

[Title omitted]

OPINION—October 13, 1923

Motion to dismiss as bill in equity for the infringement of two patents. The motion is based upon a defect of parties, the defendant, Independent Wireless Telegraph Company, contending that the patent owner is not before the Court. The motion is made upon the bill, the bill of particulars, and the contract of which the bill makes profert.

W. H. Taylor, Jr., for the motion.
L. F. H. Betts opposed.

LEARNED HAND, D .J.:

[fol. 103] The bill alleges that the inventions in suit were made by De Forest and assigned by him to the plaintiff the De Forest Company. On March 10, 1917, the De Forest Company granted an exclusive license to the Western Electric Company which granted the right "to make use * * * and sell" the inventions in suit for

the term of their existence subject to a license theretofore given to the defendant, American Telephone & Telegraph Company. This contract reserved, however, to the De Forest Company certain non-exclusive, non-transferable and personal licenses, to make and sell the patented apparatus for specified purposes not necessary to enumerate. The Western Electrict Company later assigned all its rights in the contract to the Defendant, American Telephone & Telegraph Company, in whom thereupon there vested all the interest in the patents in suit except those reserved to the De Forest Company as above stated.

On November 20, 1919, the General Electric Company made a contract with the plaintiff, Radio Corporation, by which it granted to it an exclusive license to use and sell for "radio purposes" all inventions then owned by it or thereafter acquired. "Radio purposes" was defined "as the transmission or reception of communication * * * by what are shown as electro magnetic waves, but not wire." At this time the General Electric Company did not have any interest in the patents in suit, but on July 1, 1920, the defendant American Telephone & Telegraph Company and the General Electric Company entered into a contract by which they exchanged [fol. 104] rights in various patents or applications owned or controlled by each. This contract is very long and complicated. Among the rights conferred upon the General Electric Company were (1.) a non-exclusive license to make wireless apparatus for the United States, (2.) an exclusive license "in the field of wireless telegraphy," (3.) an exclusive license to make, use and sell wireless telephone apparatus for communication between automotive vehicles except railways, (4.) an exclusive license to make, use and sell such apparatus for amateur purposes or where "the business use is incidental" or where one of the stations is portable, (5.) an exclusive license to make, sell and use wireless telephone apparatus for electric light power and traction companies, (6.) an exclusive license to make, use and sell wireless telephone apparatus as part of a public service telephone system and for all commercial uses.

Contemporaneously with this contract the defendant American Telephone & Telegraph Company consented, as was required in the contract, to the extension by the General Electric Company of its acquired rights to the Radio Company.

From these documents it follows that the defendant American Telephone & Telegraph Company having full rights in the patents in suit subject to the reserved licenses of the De Forest Company, granted exclusive licenses to the General Electric Company for certain uses of those patents, and that the Radio Company has licenses from the General Electric Company to use and sell the patented apparatus for "radio purposes" and if the General Electric Company will not provide it with apparatus to make the same.

[fol. 105] The motion does not challenge the bill as defective because of the absence of the General Electric Company and I shall therefore assume without passing on that question that the agreement of November 20, 1919, operated to pass all rights of the General Electric Company, acquired under the contract of July 1, 1920,

to the Radio Corporation. So viewed, all parties are before the court who have any interest in the patents in suit except the De Forest Company, and the interests of that company are merely a non-exclusive and personal right to make, sell and use the inventions for its own profit.

Thus stated, the case seems to me to fall squarely within Gayler v. Wilder, 10 How. 477. In that case, which was an action at law, Wilder, the assignee of a patent for safes, sued in his own name. It was proved that Wilder had given Herring an exclusive right to make and sell the safe in the State of New York, where the infringement occurred. Wilder, however, reserved to himself the right to make safes in New York, and to sell them therein on payment of the same royalty that Herring was to pay him. The Supreme Court held that in order to be an assignment authorizing the licensee to sue in his own name, the license must exclude the licensor and that as Wilder had reserved the right to make and sell safes within New York, he remained the owner and he alone could sue. The authority of that case has remained unshaken to the present time.

While Waterman v. McKenzie, 138 U. S. 252, was a case where the exclusive license was to make and sell but not to use, the result [fol. 106] was the same in a suit in equity. While the patentee had not only reserved the right to use but had not given it to the licensee, the case was treated as an instance of the doctrine laid down in Gayler v. Wilder, supra.

Whether or not Wilson v. Rousseau, 4 How. 646, 686, would be decided in the same way today, the decision depended upon the absence of any right in the licensee to exclude the licensor himself.

The reason usually given for the doctrine is that the infringer will be subject to two suits unless all the parties are joined who have an interest in the patent. Yet, so far as I can see, if the outstanding interest is only a personal right to make, sell and use the invention, there is no possibility of a second suit. The licensor in that case, having no right to exclude anyone, could not sue the infringer. It is true that if the licensee is to make, sell and use the invention for limited purposes, or to make, or sell or use alone, the infringer might be in danger, because the licensee might fail in showing that the defendant's use was within the terms of his license and the defendant would then succeed. Yet such a decree would not protect him from a subsequent suit by the owner for the acts charged as an infringement in the first.

Whether or not the rule is based on any necessity in justice, it is clear that the lower Federal Courts have tried to break its force. Thus in Brush-Swan Co. v. Thomson-Houston Co., 48 Fed. Rep. 224, the exclusive license was to sell only but Judge Shipman allowed [fol. 107] the licensee to join as party plaintiff the owner without its consent. While recognizing the usual rule, he thought that the circumstances justified an exception. The infringer corporation had complete control of the owner through ownership of its stock and forbad- its voluntary joinder as co-plaintiff. This Judge Shipman thought brought the case within the rule of Littlefield v. Perry, 21 Wall. 205.

The doctrine so laid down was extended in the Ninth Circuit to a case where there was no evidence of such control in Brush-Swan Co. v. California etc. Co., 52 Fed. Rep. 945. It was there held that an exclusive licensee though only to use and sell had an implied authority to use the owner's name, though, as I have already said, the result would be to expose the infringer to a possible second suit on the same machine if he had made but not sold or used it. That case has been followed in the Ninth Circuit and was settled law at least until recently, Excelsior Co. v. Allen, 104 Fed. Rep. 553, Excelsior Co. v. Seattle, 117 Fed. Rep. 140. The doctrine appears to have been recognized in the dictum by the Circuit Court of Appeals for the Second Circuit, in Hurd v. James Goold Co., 203 Fed. Rep. 998, though no cases were cited. In that case the license, as appears in Hurd v. Seim 191 Fed. Rep. 832, 834, did not give Hurd the right to sue in his own name. I should not feel justified in disregarding the dictum except for the last case in the Supreme Court.

In Crown v. Nye Tool Works, 261 U. S. 24, the owner had given the plaintiff an express license to sue an infringer on the plaintiff's own behalf. This the licensee did and was defeated for defect of [fol. 108] title. I cannot suppose that this decision turned only upon the failure of the plaintiff to add the name of the owner to the caption, because the whole discussion forbids it and because the bill in that event would certainly not have been dismissed without leave to plead over. The defect was one of substance going to the insufficiency of the plaintiff's title, which could have been cured only by the actual presence in the suit of the owner.

Yet the license there before the Court protected the defendant completely because it assigned all the owner's right as against the infringer in question and the owner could not therefore have maintained suit any better than if he had completely assigned the patent. It was therefore a stronger case for the plaintiff than in the cases of the Ninth Circuit or in Hurd v. James Goold Co., supra. If so, it appears to me that the greater must include the less, and it must be taken as now established that unless the license conforms with the definition given in Waterman v. McKenzie, supra, the licensee may not sue alone.

I cannot regard the mere addition of the owner's name to the caption as a compliance with the rule. If so the Supreme Court has unduly concerned itself with what is no more than a formality. The doctrine has never been put forward as a question of the caption of the suit, but as requiring the actual presence of the owner. The theory evolved in the Ninth Circuit rested upon a supposed right to appear for the owner, implied from the license. In my judgment [fol. 109] it necessarily fell as soon as the Supreme Court held that even an express grant of the right to sue was not enough to give the plaintiff any capacity to sue. I have, of course, nothing to say about the necessity or wisdom of the rule; it is enough that it is settled by the highest Court.

Bill dismissed for lack of parties, with costs.

L. Hand, D. J.

[fol. 110] IN UNITED STATES DISTRICT COURT

[Title omitted]

DECREE

This cause having come on to be heard on the 2nd day of October, 1923, upon the bill of complaint, the bill of particulars and the contracts of which the bill makes profert and upon motion of Pennie, Davis, Marvin & Edmonds, solicitors for defendant, Independent Wireless Telegraph Company, for an order dismissing the bill of complaint, and counsel for the plaintiff, Radio Corporation of America and defendant, Independent Wireless Telegraph Company, having been heard.

It is hereby ordered, adjudged and decreed that said motion be granted and that the bill of complaint herein be, and the same hereby is, dismissed with costs to the defendant, Independent Wireless Telegraph Company to be taxed.

Dated October 22, 1923.

L. Hand, U. S. District Judge.

[fol. 111] IN UNITED STATES DISTRICT COURT

[Title omitted]

PETITION FOR APPEAL—Filed October 24, 1923

To the Honorable Judges of the District Court of the United States for the Southern District of New York, Second Circuit:

The above-named plaintiff, Radio Corporation of America, feeling itself aggrieved by the final decree entered herein on the 22nd day of October, 1923, dismissing the bill of complaint herein on the ground of lack of parties with costs to the defendant, Independent Wireless Telegraph Company, hereby appeals to the United States Circuit Court of Appeals for the Second Circuit from said decree for the reasons specified in its assignment of errors filed herewith; and prays that this appeal may be allowed and that a citation be granted directed to the above-named defendant, Independent Wireless Telegraph Company, commanding it to appear before the said [fol. 112] United States Circuit Court of Appeals, and to do and receive what may appertain to justice to be done in the premises; and that a transcript, duly authenticated, of the record, exhibits and proceedings herein as pertains to the subject-matter of this appeal may be transmitted with this appeal to the said United States Circuit Court of Appeals.

Radio Corporation of America, by Sheffield & Betts, Its Solicitors.

IN UNITED STATES DISTRICT COURT

ORDER ALLOWING APPEAL—October 24, 1923

An appeal bond in the sum of Two hundred and fifty ($250.00) Dollars having been filed by the plaintiff, Radio Corporation of America, herein, American Surety Company of New York, being surety thereon, and said bond having been duly approved, it is hereby

Ordered that the above petition for appeal be and the same hereby is allowed.

L. Hand, United States District Judge.

[fol. 113] IN UNITED STATES DISTRICT COURT

[Title omitted]

ASSIGNMENT OF ERRORS—Filed October 24, 1923

And now comes the above named plaintiff Radio Corporation of America by its solicitors, and presents with its accompanying petition for appeal from the final decree entered herein on the 22nd day of October, 1923, the following assignment of errors:

1. In holding that the plaintiff Radio Corporation of America, upon refusal of the De Forest Radio Telephone & Telegraph Company, actually to join as a co-plaintiff, was not entitled to join the latter company as such party without its expressed consent, in view of the fact that that company was not within the jurisdiction of the Court.

2. In holding that the plaintiff, De Forest Radio Telephone & Telegraph Company was not before the Court.

[fol. 114] 3. In holding that the mere addition of the name of the De Forest Radio Telephone & Telegraph Company to the caption of the bill of complaint was not a compliance with the rule that the patent owner must be a party to the suit.

4. In holding that the patent owner in the case of Crown Die and Tool Company vs. Nye Tool and Machine Works, 261 U. S. 24, had given to the plaintiff therein an express or any license.

5. In holding that the question involved in the motion of the defendant Independent Wireless Telegraph Company to dismiss the bill of complaint herein has been settled by the United States Supreme Court adversely to the Contentions of the plaintiff Radio Corporation of America.

6. In holding that the plaintiff De Forest Radio Telephone & Telegraph Company was the owner of the legal title to the De Forest Letters Patent in suit Nos. 841,387 and 879,532.

7. In dismissing the bill of complaint herein.

Wherefore, and for divers other reasons from the record of this cause appearing, said plaintiff Radio Corporation of America prays that the said decree of the District Court for the Southern District of New York may be reversed.

Sheffield & Betts, Solicitors for Radio Corporation of America.

[fols. 115 & 116] CITATION—In usual form, showing service on Penny, Davis, Marvin & Edmons; omitted in printing

[fols. 117-126] BOND ON APPEAL FOR $250—Approved and filed October 24, 1923; omitted in printing

---

[fol. 127] IN UNITED STATES DISTRICT COURT

[Title omitted]

STIPULATION AS TO PARTS OF RECORD TO BE PRINTED—Filed October 26, 1923

It is hereby stipulated and agreed by and between the solicitors for the respective parties herein, subject to the approval of the Court, that the portions of the record, exhibits and proceedings in the above-entitled suit to be incorporated in and to form the printed transcript of record on appeal of this cause to the United States Court of Appeals for the Second Circuit shall consist of the following:

1. Bill of complaint.

2. Order of District Court, dated August 24, 1923, on motion of defendant Independant Wireless Telegraph Company for bill of particulars.

3. Bill of particulars of plaintiff Radio Corporation of America, dated August 28, 1923.

4. Copies of the following agreements referred to in said bill of particulars:

(a) Agreement dated March 16, 1917, between De Forest Radio [fol. 128] Telephone & Telegraph Company and Western Electric Company, Inc.

(b) Agreement dated May 24, 1917, signed by Western Electric Company, Inc.

(c) Agreement dated November 19, 1920, between General Electric Company and Radio Corporation of America.

(d) Agreement dated July 1, 1920, between General Electric Company and American Telephone & Telegraph Company.

(e) "Extension Agreement" dated July 1, 1920, between General Electric Company, Radio Corporation of America, American Telephone & Telegraph Company and Western Electric Company, Inc.

5. Notice of motion and motion to dismiss bill of complaint made by defendant Independant Wireless Telegraph Company and dated September 20, 1923.

6. Opinion of L. Hand, United States District Judge, dated October 13, 1923.

7. Final decree dismissing bill of complaint, dated October 22, 1923.

8. Appeal papers including petition and order for appeal, assignment of errors, citation on appeal, and appeal bond.

9. This stipulation and the order thereon.

10. Stipulation as to correctness of record and clerk's certificate.

Dated New York, N. Y., October 25, 1923.

[fol. 129] Sheffield & Betts, Solicitors for Plaintiff-Appellant Radio Corporation of America. Pennie, Davis, Marvin & Edmonds, Solicitors for Defendant-Appellee Independent Wireless Telegraph Company.

The foregoing stipulation is hereby approved.

L. Hand, United States District Judge.

[fol. 130] IN UNITED STATES DISTRICT COURT

[Title omitted]

STIPULATION RE TRANSCRIPT OF RECORD

It is hereby stipulated and agreed that the foregoing is a true transcript of the record of the said District Court in the above entitled matter, as agreed upon by the parties.

Dated November —, 1923.

Sheffield & Betts, Solicitors for Plaintiff Radio Corporation of America. Pennie, Davis, Marvin & Edmonds, Solicitors for Defendant Independent Wireless Telegraph Company.

[fol. 131] IN UNITED STATES DISTRICT COURT

[Title omitted]

CLERK'S CERTIFICATE

I, Alexander Gilchrist, Jr., Clerk of the District Court of the United States of America for the Southern District of New York, do hereby

certify that the foregoing is a correct transcript of the record of the said District Court in the above entitled matter as agreed upon by the parties.

In testimony whereof, I have caused the seal of the said Court to be hereunto affixed at the City of New York, in the Southern District of New York, this — day of November, in the year of our Lord, One thousand nine hundred and twenty-three, and of the Independence of the United States, the one hundred and forty-eighth.

Alex. Gilchrist, Jr., Clerk. (Seal.)

[fol. 132] In United States Circuit Court of Appeals for the Second Circuit

Radio Corporation of America, Plaintiff-Appellant, Impleaded with De Forest Radio Telephone & Telegraph Company, Plaintiff,

against

Independent Wireless Telegraph Company, Defendant-Appellee, Impleaded with American Telephone & Telegraph Company, Defendant

Before Rogers, Manton and Mayer, Circuit Judges

Opinion

Appeal from the United States District Court for the Southern District of New York. Suit for infringement of U. S. Letters Patent No. 841,387 and 879,531, by the Radio Corporation of America, [fol. 133] impleaded with De Forest Radio Telephone & Telegraph Company, plaintiffs, against Independent Wireless Telegraph Company, impleaded with American Telephone & Telegraph Company, defendants. From a decree dismissing the bill of complaint, the Radio Corporation of America ap-eals. Decree reversed.

L. F. H. Betts, Esq., Counsel for Appellant. William H. Davis, Esq., Willis H. Taylor, Jr., Esq., Counsel for Appellee.

Manton, Circuit Judge:

The bill of complaint was dismissed below on a motion made by the appellee, Independent Wireless Telegraph Company. The suit is for infringement by the Independent Wireless Telegraph Company of the De Forest audion United States patents Nos. 841,387 and 879,531. The inventions were assigned by De Forest to the interpleaded plaintiff company and it granted an exclusive license to the Western Electric Company, which granted the right to make, use and sell the inventions in suit for the term of their existence, subject to a license theretofore given to the defendant American Telephone & Telegraph Company. The De Forest Company, how-

ever, reserved certain non-exclusive, non-transferable and personal licenses to make and sell the patented apparatus for specific pur- [fol. 134] poses which are immaterial here. The Western Electric Company assigned all its rights in the contract to the American Telephone & Telegraph Company and therefore all the interest in the patent in suit, except that reserved by the De Forest Company, vested in the American Telephone & Telegraph Company. Later, the General Electric Company made a contract with the Radio Corporation of America by which it granted to it an exclusive license to use and sell for radio purposes all inventions then owned by it or thereafter acquired. The agreement defined radio purposes as a transmission or reception of communications by what are known as electro magnetic waves, but not wire. It appears from the bill of complaint that at this time the General Electric Company had no interest in the patents in suit, but on July 1, 1920, after the agreement, the defendant American Telephone & Telegraph Company and the General Electric Company entered into a contract by which they exchanged rights in the various patents or applications owned or controlled by them. By that contract, there was conferred upon the General Electric Company (a) a non-exclusive license to make wireless apparatus for the United States; (b) an ex-lusive license in the field of wireless telegraphy; (c) an exclusive license to make, use and sell wireless telephone apparatus for communication between automotive vehicles, except railways; (d) an exclusive license to make, use and sell such apparatus for amateur purposes or where the business use is incidental or where one of the stations is portable; (e) an exclusive license to make, sell and use wireless telephone apparatus for elec- [fol. 135] tric light, power and traction companies. At the same time, the American Telephone & Telegraph Company consented to the extension by the General Electric Company of its rights acquired to the appellant. Thus the American Telephone & Telegraph Company having full rights in the patents in suit, subject to the reserved licenses of the De Forest Company, granted exclusive licenses to the General Electric Company for certain uses of these patents, and the appellant has licenses from the General Electric Company to use and sell the patented apparatus for radio purposes and if the General Electric Company will not provide it with apparatus to make the same.

The reason given for the dismissal was the lack of parties to the bill of complaint. We held in Radio Corporation of America vs. Emerson (decided January 7, 1924) that under the agreements found in that record, which are the same as contained in this record, the Radio Corporation is the exclusive licensee of the patents here in suit. The argument there was that it was not the owner of the patents and as it was only a non-exclusive licensee, it was not a proper party. There the De Forest Company made claim to the patents and voluntarily asserted that claim as such party. We said that its interest could be determined at final hearing and that to permit it to remain a party plaintiff was not prejudicial to any of the other complainants. And we said:

[fol. 136] "Indeed, it is a protection to the appellants in any possible future claim which the De Forest Company might base on acts of infringement if it should eventually turn out to have some ownership in the patents."

We held that the appellant acquired an exclusive license to use and sell devices and vacuum tubes in the fields therein specified in the agreements under the De Forest patents in suit, and we said:

"It gave the Radio Corporation the sole right to use and sell radio devices and vacuum tubes employing the inventions in suit in the fields above described where toll or profit was made; in other words, for commercial communication between ships, airplanes and automotive devices. The owner of the patents and all others were excluded from such fields. The Radio amateur field is covered by a license to sell the patent devices or tubes granted to the Radio Corporation with some reservations to sell under limited conditions to the De Forest Company. With the exception of the personal non-exclusive and non-transferable license of the De Forest Company, the Radio Corporation's interest or right in this field is also exclusive. We regard these interests of the Radio Corporation as property rights and such exclusive interests and rights were apparently very valuable. The Radio Corporation is therefore in the [fol. 137] position of an exclusive licensee under the De Forest patents."

The question on this appeal differs from that presented on the Emerson appeal only in that there the De Forest Company was a willing party plaintiff, whereas here it is made a party plaintiff without its express consent. Since it refused consent here, as is set forth in the twenty-fifth paragraph of the bill of complaint, it was permissible for the appellant to name the De Forest Company as a party plaintiff under the doctrine of Brush-Swan Co. vs. Thomson-Houston Co. (48 Fed. 224), Brush-Swan Co. vs. California, etc. (52 Fed. 459) and Herd vs. Jas. Goold Co. (203 Fed. 998). An exclusive licensee may maintain an action in equity in his name and that of the owner of the patent right and may prosecute his claim without the co-operation, indeed, against the objection of the owner. (Chisholm vs. Johnson, 106 Fed. 191; Walker on Patents, Fifth Ed. §400). The instant bill of complaint was not signed or verified by or on behalf of the De Forest Company and its solicitors, and it is argued that therefore the suit is not brought in the name of such company within the meaning of the statute and rule established in the foregoing cases, and that a decision in this suit would not protect the appellees against further suits by the De Forest Company, and further, it is said that the appellant is not such an exclusive licensee as can avail itself of the rules set forth in the foregoing cases. Equity Rule 25 provides that

[fol. 138] "If special relief pending the suit is desired the bill should be verified by the oath of the plaintiff, or someone having knowledge of the facts upon which such relief is asked."

The De Forest Company here is named not only in the caption, but also in the bill as a party plaintiff. The bill is signed and verified by the appellant and signed by one of its solicitors. Such a verification by the appellant complies with both the terms and spirit of Rule 25. The name of the De Forest Company might have been signed by the appellant or its solicitors as its agents under the implied power given by the patent owner when he granted an exclusive license. The failure to sign the bill by it under the power of attorney can be corrected by amendment if there were need therefor. We pointed out in the Emerson case that there was no just fear of a successful second suit against the appellees on account of the acts charged in the bill of complaint as infringements by or on behalf of the De Forest Company. If such a suit were started, the appellant as exclusive licensee, would be a necessary party thereto. (Birdsell vs. Shaliol, 112 U. S. 884; Daimler vs. Conklin, 145 Fed. 956.) A decision in the present case would be res adjudicata as against any such suit. We have heretofore held that appellant's license entitles it to sue in the name of the patent owner and this disposes of the last argument of the appellee. (Radio Corp. vs. Emerson, supra.)

Decree reversed.

[fols. 139 & 140] IN UNITED STATES CIRCUIT COURT OF APPEALS

[Title omitted]

JUDGMENT—March 10, 1924

This cause came on to be heard on the transcript of record from the District Court of the United States, for the Southern District of New York, and was argued by counsel.

On consideration whereof, it is now hereby ordered, adjudged, and decreed that the decree of said District Court be and it hereby is reversed with costs.

It is further ordered that a Mandate issue to the said District Court in accordance with this decree.

H. W. R.

M. T. M.

Endorsed: United States Circuit Court of Appeals.—Second Circuit.—Radio Corporation of America v. Independent Wireless Telegraph Company.—Order for Mandate.—United States Circuit Court of Appeals.—Second Circuit.—Filed Mar. 10, 1924.—William Parkin, Clerk.

[fol. 141] IN UNITED STATES CIRCUIT COURT OF APPEALS

CLERK'S CERTIFICATE

I, William Parkin, Clerk of the United States Circuit Court of Appeals for the Second Circuit, do hereby Certify that the foregoing

pages, numbered from 1 to 140 inclusive, contain a true and complete transcript of the record and proceedings had in said Court, in the case of Radio Corporation of America, Impleaded, etc., Plaintiff-Appellant, against Independent Wireless Telegraph Company, Impleaded, etc., Defendant-Appellee, as the same remain of record and on file in my office.

In testimony whereof, I have caused the seal of the said Court to be hereunto affixed, at the City of New York, in the Southern District of New York, in the Second Circuit, this 21st day of March in the year of our Lord One Thousand Nine Hundred and twenty-four and of the Independence of the said United States the One Hundred and forty-eighth.

Wm. Parkin, Clerk. (Seal of United States Circuit Court of Appeals, Second Circuit.)

[fol. 142] IN SUPREME COURT OF THE UNITED STATES

On Petition for Writ of Certiorari to the United States Circuit Court of Appeals for the Second Circuit

ORDER GRANTING CERTIORARI—Filed October 13, 1924

On consideration of the petition for a writ of certiorari herein to the United States Circuit Court of Appeals for the Second Circuit, and of the argument of counsel thereupon had, as well in support of as against the same, it is now here ordered by this Court that the said petition be, and the same is hereby, granted, the record already on file as an exhibit to the petition to stand as a return to the writ.

Supreme Court of the United States

OCTOBER TERM—1[redacted] 1925

No. [redacted] 87

INDEPENDENT WIRELESS TELEGRAPH COMPANY,

Petitioner,

vs.

RADIO CORPORATION OF AMERICA,

Respondent.

PETITION FOR WRIT OF CERTIORARI TO THE UNITED STATES CIRCUIT COURT OF APPEALS FOR THE SECOND CIRCUIT AND BRIEF IN SUPPORT THEREOF.

WILLIAM H. DAVIS,
Counsel for Petitioner.

PRESS OF FREMONT PAYNE, INC., 80 Washington St., New York City.

Supreme Court of the United States

OCTOBER TERM—1923.

No.

INDEPENDENT WIRELESS TELEGRAPH COMPANY,
Petitioner,
v.
RADIO CORPORATION OF AMERICA,
Respondent.

PETITION FOR WRIT OF CERTIORARI TO THE UNITED STATES CIRCUIT COURT OF APPEALS FOR THE SECOND CIRCUIT.

TO THE HONORABLE THE CHIEF JUSTICE AND ASSOCIATE JUSTICES OF THE SUPREME COURT OF THE UNITED STATES:

Your petitioner respectfully represents unto this Honorable Court that the questions of law here presented go to the jurisdiction of the Federal Courts to entertain a suit under the patent laws of the United States brought by a licensee without the consent of the owner of the patent; and arise on a motion to dismiss for lack of parties plaintiff.

Grounds for Petition.

The grounds upon which the petition for a writ of certiorari is presented are:

1. That the decision of the Court of Appeals proposes vitally to restrict the effect of the decision of this Court in *Crown etc. Co.* v. *Nye etc. Works,* 261 U. S., 24; 43 Sup. Ct., 254, by establishing the proposition that the essential party, the owner of the patent, may be brought into the case as a party plaintiff against its will merely by adding to the caption of the bill of complaint the name of the owner of the patent and reciting in the bill of complaint that the owner of the patent was asked to join and refused and is outside of the jurisdiction of the Court; thereby introducing great unsettlement and chaos in the field of patent litigation wherever infringement injurious to the rights of a licensee is alleged;

2. That the series of agreements by which the respondent Radio Corporation of America in the instant case acquired its license rights under the two patents here in suit conveys to the Radio Corporation similar rights in literally hundreds of important patents in the new radio industry. The litigation on those patents is already very large and promises to be larger. For that reason immediate final determination of the right of the Radio Corporation to sue without joining the legal owner of the patents is of vital importance to this young industry.

The Facts.

The facts here involved are not in dispute. They are pleaded in paragraphs 8 and 9 and in paragraph 25 of the bill of complaint (Tr., pp. 133-4);

and are recited by the District Court (Tr., pp. 103-4), and by the Court of Appeals (Tr., pp. 133-5), in substantially the same words. They may be summarized as follows:

1. The patents in suit issued to Lee DeForest who assigned them to the DeForest Radio Telephone and Telegraph Company.

2. This action was brought by the respondent Radio Corporation of America, which, by mesne instruments in writing (Tr., p. 37 et seq.), and subject to the rights reserved by the numerous parties thereto, acquired the following licenses:

> "*Reserving to itself* [General Electric Co.] and its controlled companies, present and future respectively, personal licenses, transferable only to the successors to their business or part thereof and divisible only as their business is divided, to use for their own communication or other purposes for convenience or to save expense, but not for profit, the General Company hereby grants to the Radio Corporation an exclusive, divisible license to use and sell as well as a *non-exclusive, indivisible license to make,* only when, and to the extent that the General Company is not in a position to supply the desired device with reasonable business promptness (*the right to use and sell being limited* to the use and sale of apparatus purchased from the General Company or with its written consent, so far as the General Company is from time to time in condition to supply the same with reasonable business promptness) for radio purposes * * *" (Tr., pp. 47-48).

3. The owner of the patents, DeForest Radio Telephone and Telegraph Company, was requested by the respondent, Radio Corporation of America, to consent to join as a co-plaintiff but declined; the DeForest Company is not within the jurisdiction of the Court and has not appeared. The respondent, Radio Corporation of America, assumed to make the DeForest Company a party plaintiff without its consent by merely writing its name in the caption of the papers and reciting its refusal to join in paragraph 25 of the bill of complaint (Tr., pp. 12-13).

The District Court of the United States for the Southern District of New York (Judge Learned Hand) dismissed the bill of complaint for lack of parties (the DeForest Company) on the authority of the recent decision of this Court in *Crown* v. *Nye, supra.* The District Court said (Tr., p. 108):

> "I cannot regard the mere addition of the owner's name to the caption as a compliance with the rule."

The Circuit Court of Appeals for the Second Circuit reversed the District Court and remanded the case, saying (Tr., p. 137):

> "Since it (DeForest Company) refused consent here, as is set forth in the twenty-fifth paragraph of the bill of complaint, it was permissible for the appellant to name the DeForest Co. as a party plaintiff under the doctrine of Brush-Swan Co. v. Thomson-Houston Co. (48 Fed., 224), Hurd v. Jas. Goold Co. (203 Fed., 998)."

and (Tr., p. 138):

> "The name of the DeForest Company might have been signed by the appellant or its solicitors as its agents under the implied power given by the patent owner when he granted an exclusive license."

The decision of this Court in *Crown* v. *Nye, supra,* was not mentioned by the Court of Appeals.

Questions of Law.

Accepting the well-established law that a licensee* under a patent cannot maintain suit in its own name or in the name of the patent owner without joining the patent owner, where that licensee has no exclusive territorial rights, and no undivided interest in the whole patent, and where the patent owner is not the infringer, the decision of the Circuit Court of Appeals in this case presents the following important questions of law:

1. Can the licensee maintain a suit in equity against a third person without the consent of the owner of the patent merely by adding the owner's name to the caption of the bill of complaint and reciting in the body of the bill that the owner declined to join?

---

*In this case the licensee has only an exclusive right to use and sell apparatus made by another for a specified purpose and a non-exclusive right to make the apparatus for the specified purpose when that party is not in a position to do so. These rights are granted subject to rights reserved in the original licensor, the DeForest Radio Telephone and Telegraph Company; the intermediate licensee, the American Telephone and Telegraph Company; and the second intermediate licensee, the General Electric Company.

2. Does the grant of a license for certain limited purposes without exclusive territorial rights and without an undivided interest in the whole patent, carry with it an implied power, running from the patent owner to the licensee, to sign the bill of complaint as agent for the patent owner, against the will of the patent owner?

3. Does such an implied power reside in a sub-licensee who has no right to exclude the patent owner and whose only exclusive right is the exclusive right to use and sell apparatus manufactured under the patent by the intermediate licensee (its licensor) for use in a limited field, coupled with a non-exclusive right to manufacture such apparatus for use and sale in the limited field when its licensor cannot supply the demand?

WHEREFORE, your petitioner respectfully prays that this Honorable Court will be pleased to grant a writ of certiorari in this case to the Circuit Court of Appeals for the Second Circuit, to bring up this cause to this Honorable Court, to the end that the cause may be reviewed and determined by this Honorable Court, and that your petitioner may have such other and further relief in the premises as may seem appropriate, and that the decree of the Circuit Court of Appeals for the Second Circuit and every part thereof may be reversed by this Honorable Court.

And your petitioner will ever pray, etc.

INDEPENDENT WIRELESS TELEGRAPH COMPANY,
Petitioner.

Signed William H. Dawson

Counsel for Petitioner.

I HEREBY CERTIFY that I am of counsel for petitioner herein, Independent Wireless Telegraph Company; that in accordance with request of said petitioner the foregoing petition has been prepared; and that the allegations contained in said petition are true to the best of my knowledge and belief, and that said petition is not made for purposes of delay, and is, in my opinion, well founded in law and in fact, and should be granted.

Respd. "William H. Dre

Supreme Court of the United States

OCTOBER TERM—1923.

No.

INDEPENDENT WIRELESS TELEGRAPH COMPANY,
Petitioner,
v.
RADIO CORPORATION OF AMERICA,
Respondent.

BRIEF IN SUPPORT OF PETITION FOR WRIT OF CERTIORARI.

The Facts.

Our only comment on the facts as presented in the petition is to emphasize

1. That the respondent, Radio Corporation of America, is a mere licensee under the patents in suit and as such is not entitled to bring this action (*Gaylor* v. *Wilder*, 10 How., 77; *Waterman* v. *Mackenzie*, 138 U. S., 252);

2. That the owner of the patents in suit, DeForest Radio Telephone and Telegraph Company, is outside the jurisdiction of the Court, has declined to become a party plaintiff, and has not appeared in the action.

The Law.

We rely unreservedly upon the opinion of Judge Learned Hand for a correct statement of the law bearing on the present action, and believe that it is unnecessary to enlarge upon it in this brief. Although we recognize that the case of *Crown* v. *Nye,* 261 U. S., 24, was based on an assignment of the right to sue and that the present action is based on a license, we believe that the case of *Crown* v. *Nye,* is clearly controlling for the reasons stated in the opinion of Judge Learned Hand.

The Practical Effect of the Decision of the Court of Appeals.

A consideration of the history of the litigation in the Second Circuit on the patents here in suit makes more apparent the effect of the decision of the Court of Appeals in the present case.

In July, 1922, the Radio Corporation of America brought suit on these patents against *Hohenstein, et al.* The right to maintain the action in that case was asserted upon an assignment identical with that considered by this Court in the case of *Crown* v. *Nye, supra.* After the decision in *Crown* v. *Nye, supra,* the Circuit Court of Appeals, on that authority held the bill of complaint in the Hohenstein case defective for lack of parties (289 Fed., 757).

Another action, against *Emerson, et al.,* had been brought by the Radio Corporation of America on the same patents and based on an assignment as in the Hohenstein case. After the decision of this Court in the case of *Crown* v. *Nye, supra,* motions

were made in the Emerson case—by defendant to dismiss the bill of complaint and by plaintiff for leave to amend. The motion to dismiss was denied, and the plaintiff Radio Corporation of America was granted leave to amend by joining the DeForest Radio Telephone and Telegraph Company. Thereupon the DeForest Radio Telephone and Telegraph Company *actually signed the bill of complaint and appeared in the action.* The Circuit Court of Appeals for the Second Circuit held that the bill of complaint in that case was properly brought (296 Fed., 51).

After the voluntary joinder of the DeForest Company in the Emerson case, the Radio Corporation of America attempted to join the DeForest Radio Telephone and Telegraph Company and the American Telephone and Telegraph Company with it in the present action against your petitioner, Independent Wireless Telegraph Company. The American Telephone and Telegraph Company, being within the jurisdiction of the Court, was joined as a defendant. The DeForest Radio Telephone and Telegraph Company, however, was outside the jurisdiction of the Court, and refused to join. Thereupon the Radio Corporation of America attempted to join it as a plaintiff by merely typewriting its name in the caption of the bill of complaint, and reciting its refusal to join in paragraph 25.

The District Court held that the action in this form was improperly brought, and dismissed the bill of complaint (Tr. Rec. pp. 102 et seq.).

The Circuit Court of Appeals, however, referring to its opinion in the case of *Radio Corporation of America* v. *Emerson, supra,* and upon the authority of *Brush-Swan Co.* v. *Thomson-Houston Co.,* 48

Fed., 224, and cases following it, held that the bill was properly brought in the name of the patent owner.

The vital distinction between the Emerson case and the instant case is that in the instant case the DeForest Company is outside the jurisdiction of the Court, has not signed the bill of complaint or appeared, and will not be bound by the decree, whereas in the Emerson case the DeForest Company was a willing party plaintiff and would be bound by the decree.

In the instant case, the question was therefore squarely raised whether the owner of the patent could be made a party without its consent, even though it was not within the jurisdiction of the Court, by merely naming it as a party plaintiff against its will.

It seems to us that the question may be stated in this way:

Is the statute, Section 4898, and are the decisions of this Court in *Gaylor* v. *Wilder,* 10 How., 477; *Waterman* v. *Mackenzie,* 138 U. S., 252; and *Crown* v. *Nye,* 261 U. S., 24, an effective prohibition against making several monopolies out of the one and dividing them among different persons within the same limits, and an effective protection against successive recoveries of damages by different persons holding different portions of a patent right; or do those decisions of this Court concern themselves with a mere formality to be brushed aside by pleading a legal fiction which assumes to bring the patent owner into Court although it is not, in fact, in Court and would not be bound by any decree the Court might enter.

An Exception that Destroys the Rule.

If the doctrine of the Brush-Swan cases, as interpreted by the Court of Appeals of the Second Circuit, is to be thought of as an exception to the rule established by this Court in *Gaylor* v. *Wilder, supra, Waterman* v. *Mackenzie, supra,* and *Crown* v. *Nye, supra,* it goes far beyond anything for which support is found in decisions of this Court, and seems to us to defeat the purpose of the rule.

The only exception suggested to the general rule of *Waterman* v. *Mackenzie,* is found in the following sentence of the opinion of Justice Gray in that case (138 U. S. 252, 34 L. Ed., 923, 925):

> "In equity as at law when the transfer amounts to a license only, the title remains in the owner of the patent; and suit must be brought in his name, and never in the name of the licensee alone, *unless that is necessary to prevent an absolute failure of justice, as where the patentee is the infringer and cannot sue himself.*" (Italics ours.)

That exception has not subsequently been enlarged or modified in any respect by this Court. It had previously been applied specifically in *Littlefield* v. *Perry,* 21 Wall., 105; 22 L. Ed., 577.

In the *Brush-Swan* cases discussed by Judge Hand and referred to by the Court of Appeals as authority for its action in the instant case (*Brush-Swan Co.* v. *Thomson-Houston Co.,* 48 Fed., 224; *Brush-Swan Co.* v. *California,* etc., 52 Fed., 459) and in the *Excelsior cases* on the Allen patent (*Excelsior Co.* v. *Allen,* 104 Fed., 553; *Excelsior Co.* v. *Seattle,* 117 Fed., 140) the patent owner was either

controlled by the defendants or was in direct privity with them. In all those cases the patent owner and the infringer were engaged in a joint enterprise to swindle the original exclusive licensee out of his rights. The patent owner sought to protect its own wrongdoing by asserting that the exclusive licensee could not enforce its rights in a Court of Equity unless the patent owner joined as party plaintiff.

Of the dictum by the Circuit Court of Appeals in *Hurd* v. *James Goold,* 203 Fed., 998, Judge Hand said:

> "I should not feel justified in disregarding the dictum except for the last case in the Supreme Court" (*Crown* v. *Nye Tool Works,* 261 U. S., 24).

It may be noted, however, that in the *Hurd case* the patent had been held invalid by the Ohio District Court, and the patent owner had been enjoined by that Court from attempting to enforce it. The Supreme Court had later held the patent to be valid, but the patent owner was still under injunction when the suit was brought in the Second Circuit. The Circuit Court of Appeals held that since the patent owner was under injunction restraining him from joining as a plaintiff in the action, Hurd, who was a licensee for the New York territory, should be allowed to prosecute the action alone.

The extension of the theory of agency somewhat tentatively advanced by the Court of Appeals of the Ninth Circuit in *Excelsior Co.* v. *Allen,* 104 Fed., 553, but given general application by the Court of Appeals in the instant case seems to us

to defeat the entire purpose of Section 4898 of the Statutes as interpreted by this Court in *Gaylor* v. *Wilder; Waterman* v. *Mackenzie* and *Crown* v. *Nye, supra.*

Its immediate practical effect would be to enable the Radio Corporation of America to bring suit upon hundreds of patents owned by the General Electric Company, the Westinghouse Electric and Manufacturing Company, the American Telephone and Telegraph Company, the DeForest Radio Telephone and Telegraph Company, Western Electric Company, or any other person or corporation that may be taken into the Radio Corporation group by similar exchange of patent license rights. Out of each patent monopoly several will be made, distributed among different persons within the same limits, and manufacturers of radio apparatus will be obliged to defend themselves against successive attacks because of a single alleged infringing act.

Respectfully submitted,

WILLIAM H. DAVIS,
Counsel for Petitioner.

40382

IN THE

Supreme Court of the United States

OCTOBER TERM, 1925.

No. [redacted] 87

INDEPENDENT WIRELESS TELEGRAPH COMPANY,

Petitioner,

vs.

RADIO CORPORATION OF AMERICA,

Respondent.

ON A WRIT OF CERTIORARI TO THE UNITED STATES CIRCUIT COURT OF APPEALS FOR THE SECOND CIRCUIT.

BRIEF FOR PETITIONER.

WILLIAM H. DAVIS,
Counsel.

GALLO & ACKERMAN, INC., 107 Liberty St. and 6 Church St., N. Y.

INDEX OF CASES.

PAGE

Brush Swan vs. Thompson-Houston, 48 Fed., 224 9
Brush Swan vs. California, 52 Fed., 945 9
Crown Co. vs. Nye Tool Works, 261 U. S., 24 2, 9
DeForest Radio Tel. & Tel. Co. vs. Radio Corporation of America, 3 F. 2nd, 847 ..... 3, 12
Excelsior Co. vs. Allen, 104 Fed., 553 9
Excelsior Co. vs. Seattle, 117 Fed., 140 9
Gaylor vs. Wilder, 10 How., 477 ..... 2, 9
Hurd vs. Goold Co., 203 Fed., 998 9
Radio Corp. of America vs. Hohenstein, 289 Fed., 757 13
Radio Corp. of America vs. Emerson, 296 Fed., 51 14
Waterman vs. Mackenzie, 138 U. S., 252 ..... 2, 9

SUBJECT MATTER INDEX.

Jurisdiction 1
Questions Involved 2
Statement of Facts 3

- Nature of alleged infringement 3
- Reason for objection to form of suit 3
- Title to patents in suit in DeForest Radio Tel. & Tel. Co. which is not a party 3
- Rights of the Radio Corporation of America include no interest in Patent Monopoly 4
- The granting clause 6

Decision of District Court Discussed 9
Decision of Circuit Court of Appeals Discussed 10
The Practical Effect of the Decision of the Court of Appeals 10

IN THE

Supreme Court of the United States

OCTOBER TERM, 1925.

No. 435.

INDEPENDENT WIRELESS TELEGRAPH COMPANY, *Petitioner,* vs. RADIO CORPORATION OF AMERICA, *Respondent.*	On Writ of Certiorari.

BRIEF FOR PETITIONER.

This case comes up on a writ of certiorari to review the decision of the Circuit Court of Appeals for the Second Circuit (R., 58, 297 Fed., 521) refusing to dismiss the bill of complaint and reversing the District Court (R., 50, 297 Fed., 518) which had dismissed the bill for lack of parties plaintiff.

Accepting as well-established the rule that a licensee under a patent cannot maintain suit in its own name or in the name of the patent owner without joining the patent owner where that licensee

has no exclusive territorial rights and no undivided interest in the whole patent and where the patent owner is not the infringer*; the questions presented are:

1. Is the mere addition of the patent owner's name to the caption of the bill of complaint, coupled with a recital that he declined to join as party plaintiff, an effective joinder of the patent owner and an effective compliance with the above stated rule?

2. Does the grant of a license for certain limited purposes without exclusive territorial rights and without an undivided interest in the whole patent carry with it an implied power running from the patent owner to the licensee to sign the bill of complaint as agent for the patent owner against the will of the patent owner?

3. Does such an implied power reside in a sub-licensee who has no right to exclude the patent owner and whose only exclusive right arises by contract, and is the right to use and sell apparatus manufactured under the patent by an intermediate licensee (its licensor) coupled with a non-exclusive right to manufacture such apparatus for use and sale in a limited field when its licensor cannot supply the demand?

---

*Waterman vs. Mackenzie, 138 U. S., 252; Gayler vs. Wilder, 10 How., 477; Crown Co. vs. Nye Tool Works, 261 U. S., 24.

The Facts.

The infringement alleged by the Radio Corporation of America (bill of complaint, paragraph 22, R., 6) is the Independent Wireless Telegraph Company's use *for reception of commercial wireless telegraph communications* of vacuum tubes sold by the respondent, Radio Corporation of America, which tubes bore a notice that they were "licensed for amateur and experimental purposes only." The petitioner, Independent Wireless Telegraph Company, objects to the suit in its present form for the reason that it would be subject to a second suit for recovery by the DeForest Radio Telephone and Telegraph Company, holder of the legal title to the patents, which is not a party to this suit.

The merit of this contention is made very striking by the recent case of *DeForest Radio Telephone and Telegraph Company* vs. *Radio Corporation of America* in the District Court of Delaware. In that case the DeForest Company brought suit on the very patents here in suit, and was awarded a preliminary injunction by which Judge Morris (3 Fed., 2nd, 847) restrained the Radio Corporation of America, the present respondent, from selling vacuum tubes made by a subsidiary of the Westinghouse Company, a licensee.

Title to the Patents in Suit.

The bill of complaint alleges the title to the patents in suit is in the DeForest Radio Telephone and Telegraph Company. It recites (para-

graph 8, R., 2) that "the entire right, title and interest in, to and under said Letters Patent Nos. 841,387 and 879,532 * * * was duly transferred from said DeForest to * * * and became vested in the plaintiff, DeForest Radio Telephone and Telegraph Company, its successors and assigns; that on or about March 16, 1917, by an agreement in writing * * * the plaintiff, DeForest Radio Telephone and Telegraph Company, transferred to the Western Electric Company, Inc., * * * a license under said Letters Patent Nos. 841,387 and 879,532 * * * and that on or about the 24th day of May, 1917, * * * said Western Electric Company, Inc., sold, assigned and transferred to the defendant, American Telephone and Telegraph Company, its successors, legal representatives and assigns, all its right, title and interest in, to and under said agreement of March 16, 1917, between said plaintiff, DeForest Radio Telephone and Telegraph Company and said Western Electric Company, Inc."

The DeForest Company is not a party to the present action, is not within the jurisdiction of the Court, and, as recited in paragraph 25 of the bill of complaint, "before filing its bill of complaint the DeForest Radio Telephone and Telegraph Company was requested to consent to join as a co-plaintiff herein but declined * * * and that * * * said DeForest Radio Telephone and Telegraph Company was made a plaintiff herein without its consent."

The Rights of the Radio Corporation of America.

The Radio Corporation of America derives its rights under the patents in suit by the so-called

"Radio Group Agreements" (R., 21-49 inc.) involving the American Telephone and Telegraph Company, the General Electric Company, the Western Electric Company, the Radio Corporation of America and others which do not appear from the present record. The agreements are detailed and involved, but the plan of the division of rights is simple.

It was attempted to pool the patent rights of the several companies and by contract divide up those rights so as to leave each company unhampered and free from competition in its own particular commercial field (R., 34). The rights conveyed in each instance were to be enjoyed, by the terms of the contract, to the exclusion of the other contracting companies.

The American Telephone and Telegraph Company obtained the rights under the patents for the wire telephone and telegraph communication field where service was rendered for profit (R., 38 and 41).

The General Electric Company secured the rights for commercial radio telegraphy and transoceanic radio telephony (R., 38).

The Radio Corporation of America was to be an operating company for commercial radio and a sales organization for amateur radio. The General Electric Company reserved the right to manufacture for the Radio Corporation of America all the apparatus used or sold by it. The Radio Corporation of America could manufacture under the patents only in the event that the General Electric Company could not supply it with the necessary apparatus.

The granting clause to the Radio Corporation of America, being the most important for the purposes of the present case, is here quoted:

"ARTICLE I—DEFINITIONS.

1. Radio purposes is defined as the transmission or reception of communications, telegraphic, telephonic or other, by what are known as electromagnetic waves, but not by wire.

* * * * * * *

ARTICLE II—LICENSES.

1. Reserving to itself and its controlled companies, present and future, respectively, personal licenses, transferable only to the successors to their business or part thereof and divisible only as their business is divided, to use for their own communication or other purposes for convenience or to save expense, but not for profit, the General Company hereby grants to the Radio Corporation an exclusive, divisible license to use and sell as well as a non-exclusive, indivisible license to make only when, and to the extent that, the General Company is not in a position to supply the desired device with reasonable business promptness (the right to use and sell being limited to the use and sale of apparatus purchased from the General Company or with its written consent, so far as the General Company is from time to time in condition to supply the same with reasonable business promptness) for radio pur-

> poses under all patents, applications for patents, inventions and rights or licenses under or in connection with patents which the General Company now owns or controls, or which it may acquire during the term hereof except those acquired by purchase and referred to below" (R., 22, 23).

The result of these agreements is that none of the contracting companies has any exclusive territorial rights and none has any undivided interest in the patent monopoly that it did not have prior to the making of these contracts. The only right of exclusion or, in the terms of the contracts, "exclusive right" held by the several companies is *the right to exclude the other contracting companies from the commercial fields which they have agreed not to enter.*

When we narrow the discussion down to the particular commercial field in which the infringement is alleged to have occurred, we find that all the contracting companies have certain rights in this field, and that the rights of the Radio Corporation of America are "exclusive" *except for those rights.* The bill of complaint (paragraph 22, R., 6) alleges that the defendant purchased or acquired vacuum tubes sold by the Radio Corporation of America and used said tubes "in receiving commercial wireless telegraph communications or wireless telegraph messages for pay or profit."

In this field of commercial wireless telegraphy for pay or profit the Radio Corporation of America has only the right to use and sell, the General Electric Company having reserved the

right to make all apparatus for the Radio Corporation of America.

The American Telephone and Telegraph Company in its agreement with the General Electric Company (Article IV, Sec. 2, R., 37, and Article V, Sec. 2, R., 38) reserved the right to operate under the patents in the field of wireless telegraphy, the only restriction being that it be not undertaken for profit or for the transmission of messages for the public.

The patent owner, the DeForest Radio Telephone and Telegraph Company, also has rights within this field. By the agreement with the Western Electric Company (from which the rights of the Radio Corporation of America in the patents in suit are derived) (Sec. 4, R., 19), the DeForest Company reserved rights to make and use for radio distribution of news and music. There is no restriction that the apparatus be not used for distributing news and music for pay and profit. This field therefore overlaps the field in which the Radio Corporation claims its rights are exclusive, namely, "transmission or reception of communications, telegraphic, telephonic or other, by what are known as electro-magnetic waves" (R., 22).

We have, therefore, even within the Radio Corporation's restricted field, rights existing in the General Electric Company, the American Telephone and Telegraph Company and the DeForest Radio Telephone and Telegraph Company. How can it be said that the Radio Corporation of America has exclusive rights under the patents in suit? The most that can be urged is that it has the right by contract to prevent the other

contracting companies from doing certain acts within specified fields. Under the well-settled law and the Patent Statutes, it has no interest in the patent monopoly, and therefore no right of exclusion under the patents.

The Decision of the District Court.

(R., 50, fol. 103, 297 Fed., 518.)

The District Court based its decision not on the character of the license of the Radio Corporation, but on the more fundamental ground that the reservation by the DeForest Company, in the original license to Western Electric Co. upon which all the subsequent licenses depend, of the non excluseve personal right to make, sell and use the inventions for its own profit make the DeForest Company a necessary party plaintiff under the doctrine of *Gayler* vs. *Wilder*, 10 How., 477; *Waterman* vs. *Mackenzie*, 138 U. S., 252. The District Judge intimated that it might be questioned whether the rule is based on any necessity in justice and said that the lower Federal Courts have tried to break its force in:

> *Brush Swan* vs. *Thompson-Houston*, 48 Fed., 224;
> *Brush Swan* vs. *California*, 52 Fed., 945;
> *Excelsior Co.* vs. *Allen*, 104 Fed., 553;
> *Excelsior Co.* vs. *Seattle*, 117 Fed., 140;
> *Hurd* vs. *Goold*, 203 Fed., 998.

He thought these efforts had been disapproved by this Court in *Crown Co.* vs. *Nye Tool Works*, 261 U. S., 24, and said he could not suppose that the decision in that case turned only upon the

failure of the plaintiff to add the name of the owner to the caption of the bill of complaint, or as being satisfied by the theory evolved in the Ninth Circuit that the grant of a license carried with it by implication a right in the licensee to join the owner as plaintiff in a suit on the patent.

Decision of the Court of Appeals.

(R., 58, fol. 132, 297 Fed., 521.)

The Court of Appeals held that even such a license as that held by the Radio Corporation of America is sufficient to entitle it to maintain an action in the name of the patent owner without his cooperation and against his objection; that the Radio Corporation's license carried with it an implied power to sign the name of the patent owner (DeForest Company) to the bill of complaint.

The Court of Appeals proceeded on the assumption that the legal title was in the DeForest Company as pleaded; found that the Radio Corporation "acquired an exclusive license to *use and sell* devices and vacuum tubes in the fields therein specified" and held that sort of a license sufficient to enable the Radio Corporation to sue in the name of the DeForest Company.

The Practical Effect of the Decision of the Court of Appeals.

Quite aside from the other limitations of the Radio Corporation's license (ante, page 6) it is quite clear that such a license, which is limited to the right to use and sell and does not include the exclusive right to make, is, in the language of

Waterman vs. *Mackenzie, supra,* "a mere license, giving the licensee no title in the patent, and no right to sue at law in his own name for an infringement."

It is the effect of the decision of the Court of Appeals to hold that such a mere licensee, having no right to sue in his own name, has nevertheless, on the theory of implied agency, the right to sue in the name of the owner of the patent.

The Court of Appeals evidently did not think, as the District Judge thought, that the decision of this Court in *Crown Co.* vs. *Nye Tool Works* was inconsistent with this holding.

Thus the real issue in the case at bar, as we see it, is whether this Court does or does not think that the rule of *Waterman* vs. *Mackenzie* reiterated in *Crown Co.* vs. *Nye Tool Works* is effectively complied with when any holder of "a mere license" writes into the caption of the bill of complaint the name of the owner of the patent and avers in the bill of complaint that the owner of the patent refuses to join.

The Court of Appeals, resting its decision on such a license as that held by the Radio Corporation, puts the power to bring suit under the patent in the hands of any licensee who has exclusive rights of any character; whether they do or do not exclude the patent owner or other licensees.

Certain it is that such relaxation of the rule throws open the door to those evils mentioned by this Court in *Gayler* vs. *Wilder, Waterman* vs. *Mackenzie* and *Crown* vs. *Nye Tool Works,* and would "permit several monopolies to be made out of one and divided among different persons within the same limits" which this Court said was not the intention of the legislature.

No such broad relaxation of the rule suggested itself to the mind of the District Court.

It may perhaps be inferred from the opinion of the District Court that the Court thought the rule might well be relaxed, without danger of injustice, in the specific case where the license was of such a character that there remained in the patentee no right of exclusion at all; since in that case the licensor could not, the District Court thought, sue the infringer. The District Court assumed that the facts in the case at bar presented such an issue, but on the very patents here in suit the DeForest Company has sued the present respondent Radio Corporation of America, as an infringer in the District of Delaware, and the District Court there has held that the DeForest Company has sufficient title to maintain the suit and has granted an injunction (3 F., 2nd, 847).

No doubt it might often happen, where the grantor reserved to himself the right to make, use or sell, that the Courts would differ on the facts of particular cases as to whether the grantor had or had not reserved any right to exclude. That seems to us to illustrate the wisdom of the quite definite rule heretofore applied by this Court, and to show that even such a limited relaxation of the rule as Judge Hand seemed to approve, but felt compelled by the decisions of this Court not to make, is an undesirable thing.

However that may be, the relaxation of the rule inherent in the decision of the Court of Appeals in the case at bar goes far beyond anything suggested by the District Court. Under that relaxation any one of the companies involved in the so-called "radio group agreements" has the

power to bring suit against this defendant, and all for the same act of infringement if it seems to each of them that the infringing act is a violation within its peculiar field.

It would be difficult to think of a more effective way of making several monopolies out of one; and we are persuaded, as the District Court was persuaded, that the decision in this Court in *Crown Co.* vs. *Nye Tool Works* prohibited such things and did not turn only upon the failure of the plaintiff to add the name of the owner to the caption and to recite that the owner refused to join in the suit.

It is true that in the case of Crown Co. vs. Nye Tool Works this Court did not consider the effect which a license existing in the plaintiff Nye Tool Works, would have on the right to sue. That distinction has not heretofore been treated as a vital one, either by the Radio Corporation of America or by the Court of Appeals of the Second Circuit. Both the Radio Corporation and the Court of Appeals of the Second Circuit have assumed that an assignment precisely like that involved in the case of Crown Co. vs. Nye is ineffective even in the hands of the Radio Corporation.

In July, 1922, the Radio Corporation of America brought suit on these patents against *Hohenstein, et al.* The right to maintain the action in that case was asserted upon an assignment identical with that considered by this Court in the case of Crown vs. Nye, supra. After the decision in Crown vs. Nye, supra, the Circuit Court of Appeals, on that authority held the bill of complaint in the Hohenstein case defective for lack of parties (289 Fed., 757).

Another action, against *Emerson, et al.,* had been brought by the Radio Corporation of America on the same patents and based on an assignment as in the Hohenstein case. After the decision of this Court in the case of Crown vs. Nye, supra, motions were made in the Emerson case—by defendant to dismiss the bill of complaint and by plaintiff for leave to amend. The motion to dismiss was denied, and the plaintiff Radio Corporation of America was granted leave to amend by joining the DeForest Radio Telephone and Telegraph Company. Thereupon the DeForest Radio Telephone and Telegraph Company *actually signed the bill of complaint and appeared in the action.* The Circuit Court of Appeals for the Second Circuit held that the bill of complaint in that case was properly brought (296 Fed., 51).

These proceedings constitute in effect a recognition that in suits brought on the patents here involved by the Radio Corporation, the DeForest Company was a necessary party, and for that reason the Radio Corporation of America attempted to join DeForest Radio Telephone and Telegraph Company in this suit. The DeForest Company, being outside of the jurisdiction of the Court, could not be brought in as a party defendant. The Radio Corporation sought to join the DeForest Company as a party plaintiff by typewriting its name in the caption of the bill of complaint and reciting its refusal to join in paragraph 25. That attempt the District Court disapproved, on the authority of the decision of this Court in Crown vs. Nye. The Court of Appeals reversed the District Court and approved the procedure on the theory that even such a license as

that held by the Radio Corporation of America authorizes the licensee to bring suit in the name of the patent owner.

It seems to us that the question may be stated in this way: Is the Statute Sec. 4898 R. S. and are the decisions of this Court in *Gaylor* vs. *Wilder, Waterman* vs. *Mackenzie* and *Crown* vs. *Nye, supra,* an effective prohibition against making several monopolies out of one, and dividing them among different persons within the same limits and an effective protection against successive recoveries for damages of different persons holding different portions of a patent right; or does the statute, and do those decisions of this Court, concern themselves with a mere formality?

The immediate practical effect of upholding the decision of the Court of Appeals in the case at bar would be to enable the Radio Corporation of America to bring suit upon hundreds of patents owned by the General Electric Company, the Westinghouse Electric and Manufacturing Company, the American Telephone and Telegraph Company, the DeForest Radio Telephone and Telegraph Company, Western Electric Company, or any other person or corporation that may be taken into the Radio Corporation group by similar exchange of patent license rights. Out of each patent monopoly several will be made, distributed among different persons within the same limits, and manufacturers of radio apparatus will be obliged to defend themselves against successive attacks because of a single alleged infringing act.

Respectfully submitted,

WILLIAM H. DAVIS,
Counsel for Petitioner.

IN THE

Supreme Court of the United States

OCTOBER TERM, 1925.

No. 87.

INDEPENDENT WIRELESS TELEGRAPH COMPANY,
Petitioner,

vs.

RADIO CORPORATION OF AMERICA,
Respondent.

ON A WRIT OF CERTIORARI TO THE UNITED STATES CIRCUIT COURT OF APPEALS FOR THE SECOND CIRCUIT.

REPLY BRIEF FOR PETITIONER.

WILLIAM H. DAVIS,
Counsel for Petitioner.

GALLO & ACKERMAN, INC., 107 Liberty St. and 6 Church St., N. Y.

SUBJECT-MATTER INDEX.

PAGES

The point in issue is—has a mere licensee owning no part of the title to the patent a right to sue in the name of the patent owner 1-2

Respondent raises the question of title to the patents which we believe the Court need not pass upon and will not pass upon in the absence of the DeForest Company, in whom the bill of complaint alleges the title to be 2-4

Is respondent entitled to sue in the name of the patent owner 4-27

The supposed analogy to choses in action at common law 4-20

Neglects consideration of peculiar nature of patent property as enunciated in *Crown* vs. *Nye Tool Works*, 261 U. S., 24 5

Finds no basis in the patent statutes 5-7

Does not apply to assignment of claim for past infringements 8-9

Fails if carried to ultimate conclusion 10-11

PAGES

The patent owner is an indispensable party and the suit cannot proceed without him 12-20

The lower court decisions relied on by respondent are no authority to the contrary 15-20

It is not sufficient to join the patent owner as defendant in a suit instituted by the licensee unless the patent owner is himself trespassing on the licensee's rights 20-22

Equity rule 37 does not give such right 22

The DeForest Company did not give respondent the right to bring suits 23-24

The question of public policy underlying this case 24-27

The question of title discussed—under the well-settled law title is in the DeForest Company 27-34

Conclusion 34

INDEX OF CASES.

PAGES

Bank vs. N. O. & Carrollton R. R. Co., 78 U. S., 624 ..... 11 WALL. 14
Barney vs. Baltimore, 73 U. S., 280 ..... 6 WALL. 14
Blanchard vs. Eldridge, 1 Wall., Jr., 337 Fed. Cas., 1510, Vol. 3, pages 624, 625 ...26, 28
Brush Electric Co. vs. California Electric Light Co., 52 Fed., 945 .....16, 19, 20
Brush-Swan Electric Light Co. vs. Thomson-Houston Co., 48 Fed., 224 15
Chisholm vs. Johnson, 106 Fed., 191, 212, Del. 19
Crown vs. Nye Tool Works, 261 U. S., 24 .....4, 8, 14, 15, 17, 22, 24, 29
DeForest Co. vs. Radio Corporation of America, 3 Fed. (2nd), 847, Del. 3
Diamond Rubber Co. vs. Consolidated Rubber Tire Co., et al., 220 U. S., 428, 55 L. Ed., 527 18
Excelsior vs. Allen, 104 Fed., 553 17
Excelsior Wooden Pipe Co. vs. City of Seattle, 117 Fed., 140 17
Gayler vs. Wilder, 10 How., 477 .....6, 7, 28
Goodyear vs. Bishop, 4 Blatch., 438, Fed. Cas., 5558, Vol. 10, page 642 19
Goodyear vs. McBurney, 3 Blatch., 32, Fed. Cas., 5574, Vol. 10, page 699 19
Hurd vs. Goold, 203 Fed., 998, 1000 17
Libby Glass Co. vs. McKee Glass Co., 216 Fed., 172 20
Littlefield vs. Perry, 21 Wall., 88 U. S., 205 ...15, 30
Mallow vs. Hinde, 12 Wheat., 193, 198 14
Mandeville vs. Welch, 5 Wheat., 277 10

PAGES

Northern Indiana R. R. Co. vs. Michigan Central R. R. Co., 15 How., 233, 246 14
Pope Mfg. Co. vs. Gormully and Jeffery, 144 U. S., 248 29
Ribon vs. C. R. I. & P. R. R. Co. and M. & M. R. R. Co., 83 U. S., 446 ....16 WALL 14
Shields vs. Barrow, 58 U. S., 130 ....17 WALL 14
Tyles vs. Tuel, 6 Cranch., 324 6
Waterman vs. Mackenzie, 138 U. S., 252 .....4, 10, 15, 28, 29
Welch vs. Mandeville, 1 Wheat. Rep., 235 11
Williams vs. Bankhead, 86 U. S., 563 ....19 WALL 14

Supreme Court of the United States

October Term, 1925—No. 87.

Independent Wireless Telegraph Company,
Petitioner,

vs.

Radio Corporation of America,
Respondent.

REPLY BRIEF FOR PETITIONER.

Points Discussed in Respondent's Brief.

1. **The Point at Issue.** Respondent's brief concedes (pages 1-2) that—

> "The Circuit Court of Appeals assumed *arguendo* that the DeForest Radio Telephone & Telegraph Company was the owner of the patents in suit and then held that respondent's license entitled it to sue in the name of the patent owner."

It is conceded (page 6) that respondent's license is "exclusive" only with respect to the right to use and sell, and not with respect to the right

to make. It is conceded (page 9) that a grant of less than the exclusive right to make, use and sell is a mere license, "conveys no title," and "amounts to nothing more than a covenant by the patent owner not to sue, or a waiver of the right to exclude." Thus it is made clear that respondent owns no part of the title to the patent, and that the **effective holding of the Court of Appeals is that a mere licensee owning no part of the title to the patent is entitled to sue in the name of the patent owner.** That, we think, is the single point brought up for review by this writ.

2. **A Point Not Heretofore Considered.** But, departing from the foregoing point, respondent suggests that the bill might have been sustained by the Court of Appeals upon another ground—upon the ground that not the DeForest Company but the American Telephone and Telegraph Company is the owner of the patent in suit and the Telephone Company is present as a party defendant.

We do not know whether this Court will undertake to examine the agreement of March 16, 1917, between the DeForest Company and the Western Electric Company, and the subsequent assignment of that agreement by the Western Electric Company to the American Telephone and Telegraph Company, and, in the absence of the DeForest Company, undertake to decide whether those documents left the ownership of the patents in the DeForest Company or transferred it to the American Telephone and Telegraph Company. That question was not discussed by the District Court or by the Court of Appeals in the case at bar. It has elsewhere been decided in favor of

the DeForest Company on motion for preliminary injunction (*DeForest Company* vs. *Radio Corporation of America*, 3 Fed. (2nd), 847 (Delaware).

Whether this Court will undertake to make such an examination and determination or not, and regardless of where the legal title lies, it is admitted that this respondent owns no part of the title; and our position is that, owning no part of the legal title, it cannot sue for infringement of the patent; that its rights lie wholly in contract, and that if it has been wronged it should sue on the contract out of which its rights arise. Respondent has in no sense the right to exclude under the patent monopoly. That right rests with the owner of the patent monopoly. This case has been permitted to proceed thus far upon the theory that it rests with the DeForest Company. Respondent now suggests that it rests in the Telephone Company. In any event it does not rest in respondent. Respondent's contract right does not extend to one not a party to its contract, and there is no reason why petitioner should be drawn into any controversy as to where the title lies until it is sued by someone who pretends to have the title.

Respondent's counsel say a great deal to the effect that respondent has important rights which have been violated, and that respondent is without a remedy unless Section 4919, R. S., is construed to mean that respondent may sue in the name of the patent owner. It does not seem to us that any such situation exists. We do not think the pleadings show that respondent has suffered any wrong for which this suit against your

petitioner is a proper remedy. On the contrary we think the situation is that respondent has assumed in this suit to ask a remedy without any corresponding right.

POINT I.

Is respondent entitled to sue in the name of the patent owner?

This question should be discussed in the clear light of the admitted fact that respondent owns no part of the patent monopoly; that it is a "mere licensee" within the definition of this Court in *Waterman* vs. *Mackenzie,* 138 U. S., 252, reiterated in *Crown Co.* vs. *Nye Tool Works,* 261 U. S., 24.

The Supposed Analogy to Choses in Action at Common Law.

On pages 25-30 of respondent's brief is found an interesting discussion of the analogy between assigned choses in action and assigned claims for damages in patent cases, with the suggestion that the rule applied to assigned choses in action should here be applied *to the respondent's license.*

In *Crown Co.* vs. *Nye Tool Works, supra,* this Court said that to regard the claim of a patent owner for damages for infringement as only a chose in action ignores the peculiar character of patent property and the recognized rules for the transfer of its ownership and its incidents. We take that to mean that the suggested analogy

is not safely to be followed if it leads us into conflict with the statutory requirements. It seems to us that respondent's counsel follow the analogy not only into conflict with the patent statutes, but also into conflict with the common law.

It is certainly true that the common law once regarded choses in action as unassignable. That idea, like other restrictions upon the alienation of property, the common law succeeded in overcoming without legislation. By an ancillary agreement between the assignor and the assignee, as, for example, a power of attorney (which ancillary agreement was at first required to be proved and was subsequently implied), the assignee was enabled to bring suit in the name of the assignor. The suit proceeded as though no assignment had been made, and the assignee had the benefit. Subsequently, by statutory enactment, the assignee was enabled to sue in his own name.

It is equally certain that under the patent act of 1793 (1 Stat. at L., 318, Ch. 2, Sections 4, 5), this Court did not recognize any such analogy between a patent right and a chose in action as would permit the assignee to sue, either in his own name or in the name of the patent owner. The act of 1793 provided that the patent right might be assigned and that damages for infringement might be recovered "in an action on the case founded on this act, in the circuit court of the United States, or any other court having competent jurisdiction." The statute was silent as to who might bring the action.

In such an action on the case brought under the Act of 1793 in the year 1810 by a grantee of entire right, title and interest for specified terri-

tory, there was a motion for arrest of judgment on the ground that the action could not be maintained by anyone who was not the assignee of the entire right of the original patentee, and this Court arrested the judgment (*Tyler* vs. *Tuel*, 6 Cranch., 324). That was the law on the subject when Congress passed the patent act of 1836 containing the provision which now appears in Section 4919 of the Revised Statutes, that damages might be recovered "in the name of the party interested either as patentee, assignee, or grantee."

If the Act of 1836 had modified the Act of 1793 only to the extent of providing that the action should be brought "in the name of the patentee," we could understand how it might be argued that the words "in the name of" had at that time acquired a certain meaning in actions brought by assignees of choses in action, and that by analogy those words should be interpreted to mean that the action might be brought by the assignee of the whole title in the name of the patentee. But the framers of the statute did not leave the assignee or grantee of a patent right in a position which called for the application of any such analogy. Nor did they rely upon the common law modification of the rule with respect to choses in action. They provided explicitly that the assignee or grantee might bring the action in his own name.

When the Act of 1836 came before this Court in 1850 (*Gayler* vs. *Wilder*, 10 How., 477), it was held that the assignee of the entire right, title and interest, or the grantee of the entire right, title and interest within a specified territory, might

sue in his own name for infringement of his rights; but that he could not so sue unless the assignment conveyed to him "the entire and unqualified monopoly which the patentee held in the territory specified—excluding the patentee himself, as well as others." There was, of course, no need to resort to any analogy to support the right of the assignee to sue. That right was expressed in the statute. In holding that the right to sue did not pass unless the entire right, title and interest was assigned, this Court did, in a sense, follow the analogy of the rule applicable to assigned choses in action; because that rule required the assignment of the entire chose; but it is more correct to say that the Court then and there affirmed the rule that patent rights, being creatures of statute, could be assigned only in accordance with the statute, and that suits could be brought on them only in accordance with the statute, i. e., only by the patentee, assignee or grantee.

It must, we think, be recognized that in *Gayler* vs. *Wilder*, and the subsequent cases which are all to the same effect, this Court meant to say that the suit must actually be brought by the patentee, assignee or grantee; and not by someone else in his name.

But the suggestion of respondent's counsel, as we understand it, is that this established rule ought now to be modified by emphasizing the words "in the name of" in supposed analogy to the rule applied to assigned choses in action.

Respondent's counsel suggests (brief, pages 27-8) that the common law rules as to assigned choses in action "apply today with complete anal-

ogy to assignments of rights under Letters Patent" such as claims for damages for past infringement. We do not think so. Counsel say (page 27):

> "Thus, the assignee of an infringement damage claim may sue at law in the name of his assignor—following R. S., Section 4919 explicitly" (*Crown* vs. *Nye, supra*).

We do not so understand the decision in *Crown* vs. *Nye*. The question there finally discussed was whether the assignment of the right to recover for past infringement to a person having no title to the patent or interest in it gave that person the right to sue. The Court held it did not. It is true that the Court used the expression (261 U. S., 39):

> "The plaintiff below could not bring such a suit for past infringements without joining with it the owner of the patent when the infringements were committed."

But there is nothing in the case to indicate that this was intended to mean that the assignee could sue in the name of the owner. In fact, we think the decision was directly to the contrary. It was immediately pointed out (page 40) that to treat such an assigned claim as an assigned chose in action was to ignore the peculiar character of patent property and the provisions of the statute. The Court went on to quote with full approval the statement of the rule in Robinson on Patents, Volume 3, paragraph 937, that:

> "With a single exception the plaintiff in an action at law *must be the person or persons* in whom the legal title to the patent resided at the time of the infringement." (Italics ours.)

We take this to mean what it says and to exclude the idea that the suit may be brought by some other person in the name of the patentee, assignee or grantee. The sole exception (page 43) is when such owner assigns the patent and also the claim for past infringements to the same person. In such a case, as the title and ownership of the claims are united, it is held that the owner may sue. It had been held that the plaintiff in the Crown case did not have the title and consequently he did not have the right to sue for past infringement, and this Court went on to say (page 44):

> "If the owner of the patent when the infringements took place has assigned his patent to one, and his claims for damages for infringements to another, then the latter *cannot sue at law at all, but must compel his assignor of the claims to sue for him.*" (Italics ours.)

No analogy to the rule with respect to choses in action is recognized. No right to sue exists in the assignee, because he has no title to the patent. He cannot sue in his own name or in the name of the patent owner or at all. He must compel the patent owner to sue for him.

The statutory requirements apply in equity as at law (*Waterman* vs. *Mackenzie, supra*), and so we think that respondent here (if indeed it has any such exclusive right and has suffered any such damage as it avers), should be turned back from its present course. It should compel the patent owner to sue for it. In that way the rights of all the parties may be determined and preserved. There will be no need to ask this Court to modify the rule so long established by its decisions and so long understood and acted upon by the bar. The petitioner will then be relieved of all threat of multiplicity of suits for the same alleged infringing act and will be relieved from all contact with the legal controversy among those persons who severally claim to own the patent.

But the further suggestion of respondent's counsel, as we understand it, is that the respondent, being a mere licensee, and consequently unable to bring suit in its own name, ought, by analogy to the rule established with respect to choses in action, to be permitted to bring action in the name of the patent owner. Certainly no support for that suggestion will be found by following the analogy. It was well established from the beginning in the case of choses in action, that the assignee of any less than the whole of the chose in action could not sue. And the reason given was the very same reason that has been given by this Court for the rule that suit on a patent can be brought only by the patent owner.

Respondent's counsel (brief, page 26) quote from the opinion of Justice Story in *Mandeville* vs. *Welch* (5 Wheaton, 277), at page 283, to support the doctrine that the assignee of

a chose in action may sue in the name of the assignor, but in that case this Court said (page 283):

> "This doctrine was fully recognized by this court when this case was formerly before us (Welch vs. Mandeville, 1 Wheat. Rep., 235). It was then applied to a case where the whole chose in action was alleged to have been assigned; and it was certainly then supposed that the doctrine in courts of law had never been pressed to a greater extent. We are now called upon to press it still further, so as to embrace cases of partial assignments of choses in action."

The Court refused to press the doctrine further, and said (page 286):

> "The reason of this principle is plain. A creditor shall not be permitted to split up a single cause of action into many actions, without the assent of his debtor, since it may subject him to many embarrassments and responsibilities not contemplated in his original contract."

If the analogy is to be followed, it leads directly to the conclusion that a mere licensee, who is not the assignee of any part of the patent right, cannot sue, either in his own name or in the name of the patent owner.

The Patent Owner is an Indispensable Party and the Case Cannot Proceed Without Him.

That is, as we understand it, the whole sum and substance of the prior decisions of this Court. If the whole monopoly remains in the patentee, he must sue. If the whole monopoly for the territory where the infringement occurred has been granted to another, the grantee must sue, and if the monopoly has been divided into fractional parts, all of the joint owners must sue. The suit cannot in any case go forward unless the ownership of the entire monopoly in that territory is represented by the parties plaintiff. We cannot believe that this established rule can be set aside by suggesting an implied right in the licensee to sue in the patent owner's name. Nor do we think that the long series of decisions of this Court mean anything less than that the patent owner himself must sue; nor that they would be satisfied by a suit brought in the name of the patent owner by the licensee without the patent owner's consent.

When all is said and done, counsel's suggestion that a mere licensee may bring suit without the consent of the patent owner, in the patent owner's name, is only another form of the proposition asserted by the Court of Appeals in the case at bar —that respondent's license carried with it an implied power to sign the name of the patent owner to the bill of complaint.

When we ask ourselves who, under this theory, is entitled to sue, the answer must be any mere licensee with whom the patent owner has agreed that he will not grant a like license to someone

else; and that, no matter how limited the license may be. It seems to us very extraordinary to imply an authority to sue in the patentee's name from the disability of the licensee to sue in his own name which arises out of the statute itself. We take the statute to be an expression of a deliberate purpose that no one shall sue but the holder of the whole legal title. It seems to us extraordinary to say that that very disability vests in the licensee the power to proceed in a way that would not only give rise to all of the burdens upon defendants so often referred to in the decisions of this Court, but would also give to the licensee a greater control over the legal title than has the owner of the patent himself. If the licensee can litigate the validity of the legal title in the name of the owner without his consent, he can litigate it against the will of the owner and against his judgment. The owner becomes the slave and the licensee the master. Of course it will not do to say in reply to this that the action brought in the name of the patent owner does not bind the patent owner, and is not *res adjudicata* as to him, because respondent's whole argument is based upon the proposition that the suit here brought against your petitioner will be *res adjudicata* against the patent owner.

This leads us to the consideration of a very important question, which is more than a mere question of jurisdiction. It goes to the very root of legal rights and remedies.

The holder of the entire legal title of the patent within the territory where the infringement occurs is unquestionably an *indispensable* party in an action for infringement of the patent. "Such as-

signor is a necessary party, and a bill for accounting and damages is fatally defective otherwise." (*Crown Co.* vs. *Nye Tool Works*, 261 U. S., 44.) Without him the action cannot proceed. *Mallow* vs. *Hinde*, 12 Wheat., 193, 198; *Barney* vs. *Baltimore*, 73 U. S., 280; *Northern Indiana R. R. Co.* vs. *Michigan Central R. R. Co.*, 15 How., 233, 246; *Shields* vs. *Barrow*, 58 U. S., 130; *Bank* vs. *N. O. & Carrollton R. R. Co.*, 78 U. S., 624; *Ribon* vs. *C., R. I. & P. R. R. Co.* and *M. & M. R. R. Co.*, 83 U. S., 446; *Williams* vs. *Bankhead*, 86 U. S., 563.

WALL.
HOW.
WALL.
WALL
WALL.

Certainly counsel who wrote the bill of complaint in the case at bar considered the DeForest Company an indispensable party. The bill avers that the DeForest Company acquired the entire right, title and interest; that it was requested to consent to join as co-plaintiff but declined; that it is not within the jurisdiction of the Court and therefore cannot be made a defendant, and that therefore to *prevent a failure of justice*, it is made a plaintiff herein without its consent (R., 7).

We know of no theory upon which the necessity for having an indispensable party in Court can thus be dispensed with. We think respondent's counsel can cite no authority for so proceeding. It seems to us that respondent's reasoning proceeds in this vicious circle:

The DeForest Company is an indispensable party and refuses to appear voluntarily. The case cannot proceed otherwise. A person who declines to appear voluntarily can be brought into Court only by process. Therefore, to prevent failure of justice, the DeForest Company might be made a defendant if within the jurisdiction. (Thus far the reasoning proceeds

in recognition of the indispensable presence of the DeForest Company. But respondent's counsel proceed:) The DeForest Company is not within the jurisdiction and *therefore is made a party plaintiff without its consent.*

This brings us back to where we started. It assumes to ignore, but does not overcome the difficulty that as a matter of fact the DeForest Company is not in court and no decree of the Court made in its absence can bind it.

As we view it, this consideration is an insuperable obstacle in the path of respondent in this case, and aside from the considerations heretofore advanced is a sufficient reason why the language of Section 4919, R. S., cannot be interpreted as respondent contends. We think the analogy to choses in action is here of no service to respondent. The assignor of a chose in action was a purely nominal party and had no interest in the subject matter litigated, provided the entire chose had been assigned. In the case at bar, the patent owner is an indispensable party and has a most vital interest in the rights sought to be adjudicated.

The cases in the inferior courts do not constitute any authority for the suggestion that this insuperable obstacle can be waived aside.

In *Brush-Swan Electric Light Co.* vs. *Thomson-Houston Co.,* 48 Fed., 224, Judge Shipman ex-

pressly declined to decide the general question whether a licensee has an implied right to sue an infringer joining the owner of the patent against his will. He was at pains to say (page 226):

> "If the interest of the owner, who has merely given his agent a license to sell within a specified territory, and who is still the owner of the substantial and important portion of the patent, can be, against his will and without the service of process, subjected to litigation and judicial decree, there is danger that the power of the licensee will be wantonly exercised."

In that case the Brush Company (Cleveland Company), owner of the patent, was in turn owned by the real defendant, the Thomson-Houston Company, and Judge Shipman said (page 226):

> "In this case, the Cleveland Company is really a co-defendant, in view of the Thomson-Houston Company's controlling ownership of its stock."

Brush Electric Co. vs. *California Electric Co.*, 52 Fed., 945, arose out of the same controversy in the sense that the plaintiff, California Electric Light Company, was just such a licensee as the Brush-Swan Company in the earlier case, and the patent owner, Brush Electric Company, was seeking to prevent the exercise by the California Company of the license the Brush Company had granted. It is true that the real defendant did not own the Brush Company, as in the Connecti-

cut case, and this difference was very fully and forcefully insisted upon in the brief by appellant's counsel, which is reported in 52 Fed., at pages 946-952 and 955-957. Nevertheless, the patent owner did in that case submit itself to the jurisdiction of the Court and move to dismiss on the ground that its name had been used without its consent (52 Fed., 958). The Court of Appeals for the Ninth Circuit was careful to emphasize this fact (52 Fed., 958), and the case is no authority for the proposition that a Court may proceed to adjudicate the rights of the patent owner when he has not voluntarily appeared and no process has been served upon him.

In *Excelsior* vs. *Allen*, 104 Fed., 553, the patent owner came into court, associated himself with the defendant, and collaterally attacked the licensee's right. The controversy was one in which the patent owner was definitely aligned against his own licensee. This statement is equally true of the case of *Excelsior Wooden Pipe Co.* vs. *City of Seattle*, 117 Fed., 140, which arose on the same patent and out of the same state of facts.

It seems to us no fault can be found with the conclusion of the District Judge in the case at bar that the force of the dicta of the Court of Appeals of the Second Circuit in *Hurd* vs. *Goold* (203 Fed., 998, 1000) is overcome by the decision of this Court in *Crown* vs. *Nye*, supra. Certainly the case of *Hurd* vs. *Goold* is no authority for the broad proposition that a Court may proceed to adjudicate patent rights when the owner of the patent rights is not in Court. That suit was brought on the Grant rubber tire patent by the territorial licensee, James B. Hurd, and the pat-

ent owners, Consolidated Rubber Tire Company and Rubber Tire Wheel Company, against a dealer in tires made by the Kokomo Company which had in litigation in the Sixth Circuit successfully maintained the invalidity of the patent and was operating under a decree which had not been appealed from. The Courts of the Second Circuit had held the patent valid and that holding had been affirmed by this Court (*Diamond Rubber Co.* vs. *Consolidated Rubber Tire Co. et al.*, 220 U. S., 428). There was a motion for preliminary injunction which was opposed on the ground, among others (197 Fed., 760):

> "that in Ohio the complainants, Consolidated Rubber Tire Company and the Rubber Tire Wheel Company are under injunction which forbids them to prosecute this action."

The District Court said:

> "On the motion of the complainant Hurd alone, there will be an injunction as prayed for."

The Circuit Court of Appeals of the Second Circuit (203 Fed., 999) reversed the order appealed from on the ground that the complainant's right to enjoin the sale of tires made by the Kokomo Company was so much in doubt, having been certified to this Court by the Court of Appeals, that a preliminary injunction should not be granted. Having disposed of the case in that way, the Court went on to say that it would express its opinion of other questions in view of the fact that they

might come again before the District Court. It was in so expressing its opinion that the Court made the remarks upon which respondent's counsel rely. In our opinion, as we have already said, that dicta is not supported by any authority, and none was cited.

The decision in *Chisholm* vs. *Johnson* (106 Fed., 191, 212, Del.) was that an exclusive licensee may properly be joined with the legal owner of the patent as co-complainant. The statement to the effect that an exclusive licensee has an implied authority to use the name of the legal owner was mere dicta on the authority of *Brush Electric Co.* vs. *California Electric Light Co.*, supra.

The early decisions by Judge Nelson in *Goodyear* vs. *McBurney*, 3 Blatch., 32, Fed. Cas. 5574, Vol. 10, page 699 and *Goodyear* vs. *Bishop*, 4 Blatch., 438; Fed. Cas. 5558, Vol. 10, page 642, decided in 1853 and 1860 respectively, proceed on the theory that an action at law for damages for infringement of a patent may be brought in the name of the patent owner for the use of a licensee. It does not appear from the reports whether the patent owner voluntarily came into court or not. In any case they are of no force in the light of the subsequent decisions of this Court.

For all of the foregoing reasons, and particularly for the reason that the patent owner is an indispensable party having vital interests which cannot be adjudicated in his absence, we cannot agree with respondent's counsel that a mere licensee has the right to provoke an adjudication in the name of the patent owner without his consent. We cannot think, as they do, that such an interpretation of the statute is more reasonable than the

rule that the patent owner who refuses to sue may be brought in as a party defendant, which rule they say (page 29) is not within the terms of the statute.

It is not sufficient to join the patent owner as defendant in a suit instituted by the licensee unless the patent owner is himself trespassing upon the licensee's rights.

We quite agree, however, that the bringing of a patent suit by a licensee, joining the patent owner as a defendant, is not within the terms of the statute. We regard the procedure as available only where the patent owner is himself the infringer, or possibly where the patent owner is willing to sue but is under a legal disability.

If the decision in *Brush* vs. *California, supra,* is taken to support that proposition generally, we think it goes beyond and is contrary to the decisions of this Court. The only other case at all in point that we have been able to find is *Libbey Glass Co.* vs. *McKee Glass Co.,* 216 Fed., 172. In that case the patent was owned by the H. C. Fry Glass Co. The patent had been sustained and held to be infringed in a proceeding brought by the patent owner against the predecessor of the McKee Glass Company. By supplemental bill, the McKee Co. was brought into that suit and a decree was entered against it. Thereafter the patent owner with the consent of its licensee, Libbey Glass Company, licensed the McKee Co. to practice the invention for certain limited purposes. Subsequently, as it was alleged, the McKee Co. violated the limiting restrictions

of the license and the patent owner filed a bill in the State Court praying for injunction, restraining the McKee Co. from violating the conditions of the license. That bill was dismissed on the merits. Thereafter the patent owner instituted proceedings in the Federal Court against the McKee Co. for contempt, alleging violation of the injunction theretofore issued. A decree was entered adjudging the McKee Co. in contempt. At the time of the entry of the decree, the patent owner and the licensee notified the McKee Co. that they elected to rescind the license under its terms. Thereupon the McKee Co. filed a bill in equity against the patent owner in the State Court. That court issued a temporary restraining order against the patent owner restraining it from interfering in any way with the operations of the McKee Co. Thereupon the licensee, Libbey Glass Company, brought its suit in the Federal Court against the McKee Co., joining the Fry Glass Co. as defendant, to enjoin the prosecution of the State suit and the trespass upon the licensee's rights. The District Court held that under those peculiar circumstances the licensee was entitled to proceed and to join the patent owner as a defendant because the patent owner, being under injunction, could not maintain the suit in its own name. It does not seem to us that this case is any authority for an ordinary infringement suit brought by a licensee as sole plaintiff, joining as defendant a patent owner who is under no legal disability but merely declines to join as plaintiff. Nor is it, of course, an authority for joining an unwilling patent owner as a party plaintiff when he is outside of the jurisdiction of the Court.

It is true that Equity Rule 37 provides:

> "Persons having a united interest must be joined on the same side as plaintiffs or defendants, but when anyone refuses to join, he may for such reason be made a defendant."

But that is, of course, a mere rule of procedure which assumes a pre-existing right to sue and in itself creates no such right (*Crown Co.* vs. *Nye, supra*). The rule is merely declarative of settled law, and familiar instances of persons having a united interest are: joint owners of a patent, one of whom may, no doubt, join the others as defendants if they refuse to sue; and *cestuis que trust,* who may join the trustee as defendant if he refuses to sue; and stockholders of a corporation who may in a proper case join the corporation as a defendant if it refuses to sue. But in all of these cases the party suing has not only an interest in the outcome of the suit, but part of the united interest in the subject-matter, enforcible by him against the real defendant. Respondent has no interest in the subject-matter of this litigation—the patent monopoly. Its rights arise wholly out of its contract. It cannot enforce those rights in this action against the petitioner but only in an appropriate action on its contract against the other party thereto. It cannot derive from Equity Rule 37, or from the equity practice of which that rule is declarative, any right to sue the petitioner.

The Alleged Express Consent of the DeForest Company.

Respondent's counsel argue (brief, pages 20-21) that the clause of the agreement of March 16, 1917, which provides that not only the DeForest Company but the Western Electric Company and its assigns may institute suits for infringement, is, assuming that the DeForest Company has not parted with the title, to be taken as an express grant of the right "to bring a suit for an infringement in the field of its licensed rights, in the name of the DeForest Company or by joining it as a party."

In the case of DeForest Radio Telephone and Telegraph Company against respondent, pending in the District of Delaware, in which Judge Morris granted a preliminary injunction on the ground that the DeForest Company has the right to sue; the respondent denied that the clause in question gave the Deforest Company such right. In their brief on final hearing in that case, which is now in the hands of the District Court for decision, respondent's counsel say (page 62):

> "The paragraph as to suits, etc., in the present case cannot be given the exaggerated effect which the plaintiff strives to put upon it. Obviously, it was inserted to avoid disputes between the parties over costs and recoveries, and not to endow a party with a right to sue.
>
> *That right comes only from the Laws of the United States, and may not be conferred by the parties*" (Rev. St., Sec. 4919). (Italics theirs.)

And again (page 65):

> "It has heretofore been pointed out (page 63) that the purpose of this clause in the agreement was merely to settle the question of the division of costs and recoveries. However, if it be viewed as an attempt to assign a right to sue or to empower a party not otherwise authorized under the laws of the United States to sue, it is clear that under the decision in *Crown* vs. *Nye Tool Works,* it is wholly ineffective to that end."

There is no doubt that the right to sue comes only from the laws of the United States and is not a right to be disposed of by agreement between the parties. If title remained in the DeForest Company, it alone has the right to sue. If title passed to the Western Company, its assignee, the Telephone Company alone has the right to sue. Admittedly, title did not pass to the respondent, and no agreement between the parties can give it the right to sue. It seems to us mere subterfuge to say that respondent nevertheless can sue by the mere formality of pretending to join the DeForest Company as plaintiff or actually joining the Telephone Company as defendant against its will.

The Question of Public Policy Underlying This Case.

The fact is that the whole controversy now before this Court arises out of an elaborate plan to divide the rights under a very large number

of patents, not territorially, but according to the uses to which the inventions are put—to one corporation for amateur purposes, to another for commercial purposes, to one for telegraphy, to another for telephony, etc.; and to create such a situation that each one of those corporations may sue on any or all of the patents for an act which is alleged to be an infringement with respect to that particular use which is set apart for commercial exploitation by that particular member of the group. Whether that purpose is effected by saying that the DeForest Company is the owner of the legal title and has given an expressed or implied authority to use its name, or by saying that the American Telephone and Telegraph Company has the legal title, and in bringing it in as a party defendant when it refuses to sue, makes little difference, we suppose, to the respondent, and it certainly makes none at all to the questions of public policy involved, or to petitioner who asserts that what it has done is no infringement at all but who is nevertheless threatened with the possibility that what it has done may be claimed to be an infringement of the several rights of all, or more than one, of the parties to the group agreement.

Petitioner is not at all interested in the pending legal controversy as to whether the title to these patents is in the DeForest Company or the American Telephone and Telegraph Company, but it is very vitally interested that, when called upon to defend itself against a charge that it has infringed these patents, it may know once for all that if it successfully defends itself it will not be called upon to defend itself again, and that

if a judgment is against it a satisfaction of that judgment will forever discharge it from all liability for its infringing acts.

It has, as we understand it, heretofore been the conception of this Court that in this very sense a patent monopoly is a single thing and every attempt to treat it as a divisible thing has heretofore failed. The particular kind of division now attempted is a peculiarly obnoxious one. To express that thought we cannot do better than use the language used by Justice Grier in 1849, in *Blanchard* vs. *Eldridge*, 1 Wall. Jr., 337, Fed. Cas., 1510, Vol. 3, pages 624, 625:

> "A machine for turning irregular figures may be used for numberless purposes. If the patentee or his assignees can assign to A. an exclusive right to use the machine for making shoe lasts, to B. for turning spokes, to C. for axe handles, and so on to the end of the alphabet, then may he, out of his one monopoly carve out a thousand others, each subdivision, like a polypus, being itself a several monopoly, and having a separate existence in the same place. What endless perplexity and confusion must necessarily arise from the establishment of such a doctrine. Suppose the monopoly granted by this patent parcelled out to some twenty sub-monopolists, with an exclusive right to each to use his machine for certain purposes, in any given place: what remedy could A. have against B. for an infringement of his special privilege? The patentee or grantor, might restrain his grantee of a machine for a special use, by a covenant; but as between the several grantees

no action could lie, although they alone might suffer from a breach of the covenant.

But it is sufficient for purposes of the present inquiry, that the act of congress has not given a legal sanction to such transfers or assignments, nor subjected even a pirate of the machine to fifty different suits by fifty several assignees, whose several interests might be affected, if a patent could be thus split up into numerous exclusive rights, or sub-monopolies."

We believe that every subsequent decision of this Court has borne out the thought thus expressed by Justice Grier. If anyone supposed that his language exaggerates the perplexity and confusion that must arise from the establishment of such a doctrine, he need only read the agreement between the General Electric Company and the American Telephone and Telegraph Company (R., pages 34-49 and particularly pages 38-44), out of which respondent's rights arise, and then attempt to say what particular act of alleged infringement falls within the kind of use attempted to be reserved to the General Electric Company and its licensees, on the one hand, or to the American Telephone and Telegraph Company, on the other hand.

POINT II.

Is the American Telephone and Telegraph Company the owner of the patent in suit?

We do not think this point is raised by the pleadings or that it was brought up by the writ,

and, for the reasons above stated, we do not think it is material. In any event, we insist that it ought not to be made the basis of the continued prosecution of this action unless this Court can, in the absence of the DeForest Company, so dispose of the question of title as to estop the DeForest Company from ever asserting ownership of the patent against this petitioner. We do not see how any such disposition of the question of title can be made.

Furthermore, we do not believe that the agreement of March 16, 1917 (R., 17-21, fols. 35-44), vested title in the Western Electric Company.

In *Gayler* vs. *Wilder*, 10 How., 477, 494, this Court, citing with approval the case of *Blanchard* vs. *Eldridge*, ante, said that an assignee of a patent right may sue in his own name for infringement:

> "But in order to enable him to sue, the assignment must undoubtedly convey to him the entire and unqualified monopoly which the patentee held in the territory specified—excluding the patentee himself, as well as others."

In *Waterman* vs. *Mackenzie, supra*, this Court said that a patentee might assign by instrument in writing

> "either (1st) the whole patent, comprising the exclusive right to make, use and vend the invention throughout the United States; or (2nd) an undivided part or share of that exclusive right; or (3rd) the exclusive right

under the patent within and throughout a specified part of the United States * * *. Any assignment or transfer, short of one of these, is a mere license, giving the licensee no title in the patent, and no right to sue at law in his own name for an infringement."

In *Pope Mfg. Co.* vs. *Gormully and Jeffery,* 144 U. S., 248, where the attempt was to divide the monopoly according to the claims of the patent, this Court referred to *Gayler* vs. *Wilder, supra,* and said (page 250):

> "While that of course was a different question from the one involved in this case, the trend of the entire opinion is to the effect that the monopoly granted by law to the patentee is for one entire thing, and that in order to enable the assignee to sue, the assignment must convey to him the entire and unqualified monopoly which the patentee held, in the territory specified, and that any assignment short of that is a mere license."

Again, in *Crown Co.* vs. *Nye Tool Works, supra,* this Court, referring to *Gayler* vs. *Wilder, supra,* said (261 U. S., 38):

> "The effect of the opinion in that case is that the monopoly granted the patentee is for one entire thing; and, in order to enable an assignee to sue, he must have received the entire and unqualified monopoly in the territory specified."

The case of *Littlefield* vs. *Perry*, 88 U. S., 205, is not a departure from that rule, but, on the contrary, is a reaffirmation of it. The whole effect of that decision, so far as it relates to the question now under discussion, is that a person to whom the patent right has been granted by an instrument in writing may turn about and grant to the original owner a license just as he could grant a license to any other person.

Clearly the agreement did not grant to the Western Company the unqualified monopoly excluding the patentee himself as well as others. There was no grant to the Western Company with a license back to the DeForest Company. The DeForest Company never parted with the rights expressly reserved.

It may be assumed, we think, that the draftsman of that agreement knew the difference between the assignment of a patent and the grant of a license, and that, if the parties had intended to assign the patent, the agreement would have said so. The DeForest Company was the owner of a large number of patents and patent applications relating to radio telephony and telegraphy, and was engaged in the manufacture, use and sale of radio devices. The Western Electric Company was a prominent manufacturer of telephone and telegraph devices, and wanted to acquire a license under the DeForest patents and applications. The document says that the DeForest Company grants to the Western Company (R., 17)

> "a license (free of royalties or other payments other than those herein specified) to make, use, install, operate and lease, and to sell or otherwise dispose of, etc."

The license granted was expressed to be subject to the rights expressly reserved by the DeForest Company (R., 18):

> "The said license granted and to be granted to the Western Company is exclusive except for the aforesaid rights now held by the American Telephone and Telegraph Company and except for the rights expressly reserved herein by the DeForest Company."

Under this single granting clause were included inventions disclosed in patent applications filed subsequent to and also prior to August 14, 1914. The rights reserved with respect to inventions disclosed in applications filed subsequent to August 14, 1914 were exclusive for certain purposes (pars. 2 and 3, R., 18). Rights reserved with respect to inventions disclosed in applications filed prior to August 14, 1914, which includes the patents here in suit, were not exclusive. It does not seem to us that this single granting clause can be taken to be an instrument in writing assigning some patents and also an instrument in writing granting a license under other patents.

As we understand the law as enunciated in the cases above discussed, the mere reservation by the DeForest Company of the right to practice the invention made the agreement less than an assignment. That this was the view of the parties seems clear from the subsequent covenants of the agreement. Reserving to the DeForest Company the right to sue in fields in which it possessed rights, it was attempted to grant to the Western Company a right to sue in its fields, which overlapped

the fields reserved to DeForest (R., 19, fol. 40). If the intent had been to assign the patents, there was no need to grant to the Western Company a right to sue. It is true that the DeForest Company, having reserved the right to sue and the other rights above discussed, retained also the legal title, and the attempted grant to the Western Company of the right to sue was futile. The clause amounted to no more than an agreement as to the sharing of expenses of litigation and recoveries.

The usual covenant with respect to the execution of further documents, if necessary (R., 20, fol. 41), was expressed as follows:

> "Execute and deliver and cause to be executed and delivered all such further licenses and papers as the legal counsel of the Western Company may advise are necessary or convenient to perfect the license to the Western Company, its successors and assigns, herein conveyed or intended or agreed to be conveyed."

The DeForest Company granted to the Western Company (R., 20, fol. 42) a non-revocable right to examine and take copies of all its applications now pending in the United States Patent Office, but it is clear from this clause of the agreement that the pending patent applications and future patent applications covered by the agreement, were to be prosecuted by the DeForest Company. If an assignment had been intended, there was no need for any such grant, and the patent applications would certaintly have been prosecuted by the assignee; and there would have been in-

cluded the usual provision authorizing the Commissioner of Patents to issue patents on pending applications to the Western Electric Company.

In the usual clause providing that the rights granted should be assignable by the Western Company, was included the provision (R., 21, fol. 42) that the Western Company might

> "grant licenses to various persons, firms or corporations for the several uses to which the inventions are applicable."

If the document had been an assignment, there would have been no need to include this provision in it.

The concluding clause of the agreement was:

> "It is understood and agreed that the acceptance of this license by the Western Company shall not be construed as granting or implying the grant or surrender by it of any rights or licenses whatever under its patents granted or to be granted."

The purpose of this clause seems to us clear. The Western Electric Company, owner of a great many valuable patents, did not want to be in the position of granting to the DeForest Company any license. It preferred to take a license from the DeForest Company, letting it reserve the rights specified. If it had taken from the DeForest Company an assignment and granted back to it a license, it might have been that the license carried with it a right to use other inventions owned by the Western Company. It therefore took pains

to see that the rights reserved by the DeForest Company never came into its hands to be merged with its other patent rights; and it took pains to specify that the agreement in question should not be construed as a transfer from the DeForest Company to it of the whole right with a license back.

CONCLUSION.

It is submitted that, irrespective of where the title is, the respondent, Radio Corporation of America, has no interest in the patent monopoly and no right to sue by joining the patent owner as defendant or as plaintiff; that the course suggested by respondent finds no authority on principle, analogy or precedent, and is directly subversive of the principles relating to enforcement of patent monopolies expressed by statute and established by the long line of uniform decisions of this Court.

Respectfully submitted,

WILLIAM H. DAVIS,
Counsel for Petitioner.

Supreme Court of the United States

OCTOBER TERM, ~~1924~~ 1925

No. 435. 87

INDEPENDENT WIRELESS TELEGRAPH COMPANY,

Petitioner,

vs.

RADIO CORPORATION OF AMERICA,

Respondent.

MEMORANDUM FOR RESPONDENT IN OPPOSITION TO PETITION FOR WRIT OF CERTIORARI

L. F. H. Betts,
Counsel for Respondent.

Supreme Court of the United States

October Term, 1924,

No. 435.

Independent Wireless Telegraph Company,
Petitioner,

vs.

Radio Corporation of America,
Respondent.

MEMORANDUM FOR RESPONDENT IN OPPOSITION TO PETITION FOR WRIT OF CERTIORARI

In reply to petitioner's grounds for applying to this Honorable Court for a writ of certiorari, respondent submits:

(1) The decision of the Circuit Court of Appeals for the Second Circuit is in harmony with the decision of this Court in *Crown, etc., Co.* vs. *Nye, etc., Works,* 261 U. S. 24, and, instead of "introducing great unsettlement and chaos in the field of patent litigation", it operates to insure to exclusive licensees under letters patent the protection of "valuable legal and equitable rights which should be protected by a court of equity as against infringement of such rights." (*Radio Corporation* vs. *Emerson,* 296 Fed. 51, 54.)

Furthermore, no new proposition of law is involved herein, as the Circuit Court of Appeals has merely followed earlier decisions of the Ninth Circuit Court of Appeals and other Federal courts, and has merely reiterated the right of an exclusive licensee to sue "in the name of" (R. S., sec. 4919) the patent owner. So far as we know, the decision herein is not in conflict with any decision of this or any other court.

(2) Paragraph 2 of Petitioner's "Grounds for Petition" gives the impression that the question involved herein will arise in all of respondent's litigation on patents in the new radio industry. As a matter of fact, it will arise, if at all, in only a few of the suits brought by respondent.

(3) Another reason why we believe this Court should not now take up the question raised by Petitioner is that there is another ground upon which Respondent contends that the Circuit Court of Appeals could have reversed the District Court. What this is will be pointed out under Point III of this memorandum.

THE FACTS

Although the facts here involved are not in dispute, we desire to emphasize certain facts not emphasized or not stated by Petitioner:

(1) The instrument by which the DeForest Radio Telephone & Telegraph Company granted a "license" to the Western Electric Company (Tr., pp. 35-43)—which was later assigned to the American Telephone & Tele-

graph Company (Tr., p. 45)—operated, in our opinion, to vest the legal title to the patents here in suit in the "licensee", and, by virtue of the subsequent assignment, in the defendant American Telephone & Telegraph Company. (See Point III, *infra.*)

(2) In the field in which Petitioner is alleged to have infringed—commercial wireless telegraphy for toll or profit—, Respondent has an *exclusive* license throughout the United States and for the full term of the patents and this license is not subject to any other licenses; in that field, Respondent is the *sole* and *exclusive* licensee. Neither the owner of the patents nor any other licensee thereunder has *any* rights in that field.

(3) The licenses acquired by Respondent are *exclusive* in certain additional fields. *All* rights reserved by the *DeForest Company,* under the patents in suit, are *non-exclusive,* and, in the radio field, are also *personal.*

(4) The DeForest Company has made no objection to being joined as an unwilling party-plaintiff in this suit.

QUESTIONS OF LAW

We do not understand that there is any "well-established law that a licensee under a patent cannot maintain suit . . . *in the name of the patent owner* [italics ours] without joining the patent owner, . . ." On the contrary, we submit, first, that the patent statutes specifically provide for bringing suit "in the name of the pat-

ent owner"; second, that, where suit is brought "in the name of the patent owner", the patent owner *is* joined; and, third, the reported decisions show that this proposition of law is not only not well-established but is non-existent.

As to Petitioner's second "Question of Law", the essential fact that the license is exclusive is not stated.

Petitioner's third "Question of Law" is misleading in the emphasis placed on the fact that the licensee "has no right to exclude the patent owner". That is not the situation in this case so far as the specific right involved herein is concerned, as has been pointed out above.

ARGUMENT

Point I

Both the District Court and Petitioner place their chief reliance on the decision of this Court in *Crown, etc., Co.* vs. *Nye, etc., Works,* 261 U. S. 24, and the Petitioner claims that the writ of certiorari should issue in this case because the decision of the Circuit Court of Appeals "proposes vitally to restrict the effect of that decision".

There is, however, an essential difference between the facts of that case and the facts of this case.

In *Crown* vs. *Nye,* the plaintiff had no right to practice the invention of the patent there in suit (*i. e.,* had no license) and none was given by the instrument upon which it based its right to sue: *i. e.,* the plaintiff there had no legal or equitable right which it was seeking to protect by injunction. The patent owner attempted to

transfer the incident to a right without transferring the right.

In the instant case, the patent owner has transferred to Respondent an exclusive license right to practice the invention for certain specified purposes—a part of the common law right. The Circuit Court of Appeals held that, under those circumstances, the incidental right to protection, by injunction, of the exclusive right, passes by implication. This makes this case fundamentally different from *Crown* vs. *Nye*.

Thus the decision of the Circuit Court of Appeals herein is thoroughly consistent with the decision of this Court in *Crown* vs. *Nye* and has no limiting effect thereon. We know of no other case with which the decision is in conflict.

Petitioner seeks to show that the *Brush-Swan* and *Excelsior* cases are not authority for the decision herein by stating that "In all those cases the patent owner and the infringer were engaged in a joint enterprise to swindle the original exclusive licensee out of his rights." There are two answers to this position: first, each of those cases was decided on the broad principle that an exclusive licensee may sue, to protect his exclusive rights, in the name of the patent owner—with or without the latter's consent; second, whether or not the DeForest Company, in the instant case, is engaged in such a joint enterprise with Petitioner, its refusal to join as a co-plaintiff will have exactly that effect if this Court should now hold that Respondent cannot sue in the name of the DeForest Company and that the DeForest Company is the owner of the legal title to the patents in suit.

Point II

We do not consider that there is involved in this suit any question of importance which is of such general interest as to warrant this Court in taking it up on certiorari.

Petitioner's fear as to the "immediate practical effect" of the decision below (Petitioner's Brief, p. 14), seems somewhat exaggerated: it is hardly likely that any single concern would be desirous of commencing suits on "hundreds of patents". However, if its *exclusive* rights in many patents should be extensively invaded, and if the various patent owners should aid such infringement by refusing to co-operate with Respondent, it would be a travesty on justice if Respondent could not seek the aid of the courts to enjoin the invasion of its exclusive license rights.

As to the danger of infringers having "to defend themselves against successive attacks because of a single alleged infringing act", this danger did not appear to the District Court to exist. Judge Hand said (Tr., p. 106):

> "The reason usually given for the doctrine is that the infringer will be subject to two suits unless all the parties are joined who have an interest in the patent. Yet, so far as I can see, if the outstanding interest is only a personal right to make, sell and use the invention, there is no possibility of a second suit. The licensor in that case, having no right to exclude anyone, could not sue the infringer."

And, as already pointed out, there is here *no* outstand-

ing interest in the field in which Petitioner has infringed, and the DeForest Company has no exclusive right in any field.

Point III

Even if Respondent was not entitled to bring this suit in the name of the DeForest Company, as it has done, there still remains another ground, as we believe, for sustaining the reversal by the Circuit Court of Appeals of the District Court's decree. Thus the question raised by Petitioner is not necessarily determinative of whether the bill herein should have been dismissed.

The other basis for reversing the decree of the District Court is that the legal title to the patents in suit is in the defendant American Telephone & Telegraph Company (which has been served and has appeared) and not in the plaintiff DeForest Radio Telephone & Telegraph Company. If this is so, then the patent owner is unquestionably before the Court.

Whether title is in the Telephone Company or in the DeForest Company depends solely upon the construction of the DeForest-Western Electric contract of March 16, 1917 (Tr., pp. 35-43).* This question is of no general or public interest and affects only a comparatively small number of patents. It is submitted that it is not the type of question that this Court desires to take up on certiorari.

---

*District Judge A. N. Hand held in effect, in an unreported decision, that title passed to the American Telephone & Telegraph Company (*Radio Corporation* v. *Emerson*, U. S. D. C., S. D. N. Y., Feb. 9, 1923).

Therefore, as the question raised by Petitioner is not determinative of the correctness of the decision of the Circuit Court of Appeals and as the other question is not of public interest, it is submitted that the writ of certiorari should not be issued herein.

CONCLUSION

For the reasons outlined above, it is respectfully submitted that this petition for a writ of certiorari should be denied.

L. F. H. BETTS,
Counsel for Respondent.

269

IN THE

Supreme Court of the United States

October Term, 1925.

No. 87.

INDEPENDENT WIRELESS TELEGRAPH COMPANY,

Petitioner,

vs.

RADIO CORPORATION OF AMERICA,

Respondent.

On a Writ of Certiorari to the United States Circuit Court of Appeals for the Second Circuit.

BRIEF FOR RESPONDENT.

John W. Davis,
James J. Cosgrove,
Counsel.

Chas. P. Young Co., Printers, 127 Water St., N. Y.

INDEX TO SUBJECT MATTER.

	PAGE
General Statement	1
Questions Presented	2
The Facts	2
DeForest-Western Electric Co. Agreement	4
DeForest Non-Exclusive Rights	4
Exclusive Licenses of the Respondent	6
Injury to Repondent by Infringement	7
Respondent's Contentions	8
Title to Patents in Suit Was Assigned to Telephone Company and DeForest Company Became a Mere Non-Exclusive Licensee	8
Combination Necessary to Vest Title	9
Agreement of March 16, 1917	10
Under Authorities Title is in Telephone Company	13
Authorities Do Not Support Title in DeForest Company	16
DeForest Company Was Not Joined as a Party Without Its Consent	20
Express Consent of DeForest Company	20
DeForest Company Was Joined as a Party With Its Consent, Implied from the Agreement of March 16, 1917	21
Doctrine Formulated in the Brush Cases Has Not Been Disturbed by this Court	23
Analogy of Assignments of Choses in Action at Common Law	25

PAGE

ANALOGY OF ASSIGNMENTS OF CLAIMS FOR DAMAGES FOR PAST INFRINGEMENT 27

THE RULE OF THE ANALOGOUS CASES SHOULD BE APPLIED HERE 28

PETITIONER WILL NOT BE SUBJECTED TO FURTHER SUITS FOR THE SAME INFRINGING ACT AND THERE IS NO DIVISION OF THE MONOPOLY OF THE PATENTS 30

CHARACTER OF RESPONDENT'S LICENSE IS SUCH AS TO ENTITLE IT TO SUE IN THE NAME OF THE PATENT OWNER 33

THIS SUIT IS BROUGHT "IN THE NAME OF" THE DE-FOREST COMPANY WITHIN THE STATUTE AND THE DOCTRINE OF THE BRUSH AND ANALOGOUS CASES 34

TABLE OF CASES CITED.

Abbotsford, The, 98 U. S., 440 26

American Tel. & Tel. Co. *vs.* Radio Audion and De-Forest Cos., 281 Fed. 200 (affirmed 284 Fed. 1020) 12

Bates *vs.* Kempton, 73 Mass. 382 28

Birdsell *vs.* Shaliol, 112 U. S. 484 32

Blair *vs.* Lippincott Glass Co., 52 Fed. 226 32

Bloomer *vs.* McQuewan, 14 How. 539 9

Brammer *vs.* Jones, Fed. Cases 1806; 4 Fed. Cases 11, 12 22

Brush-Swan Elec. Co. *vs.* Thompson-Houston, 48 Fed. 224 ..... 21, 23, 24, 25, 28, 29

Brush Electric Co. *vs.* California Electric Co., 52 Fed. 945 ..... 21, 23, 24, 25, 28, 29

Chisholm *vs.* Johnson, 106 Fed. 191 ..... 22, 32

PAGE

Crown Co. *vs.* Nye Tool Works, 261 U. S. 24 9, 10, 16, 19, 23, 24, 27, 28, 30

Daimler *vs. Conklin,* 145 Fed. 955 32

DeForest Co. *vs.* Radio Corp. of America, 3 Fed. (2nd) 847 ..... 8, 16

Dietz *vs.* Ham Co., 47 Fed. 320 ..... 30, 32

Duffield *vs.* Elwes, 1 Bligh. N. R., 497 (English) 26

Excelsior *vs.* Seattle, 117 Fed. 140 21

Excelsior Wooden Pipe Co. *vs.* Allen, 104 Fed. 553 21

Foss *vs.* Bank, 111 Mass. 285 28

Frankfort Whiskey Process *vs.* Pepper, 26 Fed. 336 13

Gaylor *vs.* Wilder, 10 How. 477 ..... 16, 17

Goodyear *vs.* Allen, 6 Blatch. 33 35

Goodyear *vs.* Bishop, 2 Fish. Pat. Cas. 96 22

Goodyear *vs.* Burney, 3 Blatch. 32 22

Griggs, Cooper & Co. *vs.* Erie Preserving Co., 131 Fed. 359 13

Grover *vs.* Grover, 24 Pick. 261 28

Hammond *vs.* Hunt, Fed. Case 6003; 4 Ban. & A. 111 32

Hayward *vs.* Andrews, 106 U. S. 672 28

Hurd *vs.* Goold, 203 Fed. 998 21

James *vs.* Newton, 142 Mass. 366 26

Jergens, Andrew & Co. *vs.* Woodbury, Inc., 273 Fed. 952 (affirmed 279 Fed. 1016) 14

Libbey Glass Co. *vs.* McKee, 216 Fed. 172 (affirmed 220 Fed. 672) 22

Littlefield vs. Perry, 21 Wall. 222 ..... 15, 16, 17, 18, 20, 22

Mandeville *vs.* Welch, 5 Wheat. 277 26

Mass. Co. *vs.* Kidd, 142 Fed. 285 28

New York Guaranty Co. *vs.* Memphis Water Co., 107 U. S. 205 25

PAGE

Paper Bag Case, 210 U. S. 405 9

Pope Mfg. Co. *vs.* Clark, 46 Fed. 789 14

Radio Corp. of America *vs.* Emerson, 296 Fed. 51 (Certiorari denied 265 U. S. 582) 7, 8, 14, 15, 20, 21, 24, 25, 31, 32, 33

Radio Corp. of America *vs.* Hohenstein, 289 Fed. 758 ..... 8, 24

Radio Corp. of America *vs.* Independent, 297 Fed. 518 (Reversed 297 Fed. 521) 15, 22, 23, 31, 35

Rude *vs.* Wescott, 130 U. S. 152 18

Sirocco Eng. Co. *vs.* Monarch Ventilator Co., 184 Fed. 84 ..... 13, 14

St. Albans Co. *vs.* Elwell, 87 Vt. 479 28

Sumner *vs.* Sleeth, 87 Ill. 500 28

U. S. *vs.* Ninety-nine Diamonds, 139 Fed. 961 26

Wallach *vs.* Wigmore, 87 Fed. 469 32

Waterman *vs.* Mackenzie, 138 U. S. 252 9, 16, 18, 19, 20, 27, 32

Wilson *vs.* Chickering, 14 Fed. 917 22

Supreme Court of the United States

October Term 1925.

No. 87.

INDEPENDENT WIRELESS TELEGRAPH COMPANY,

Petitioner,

vs.

RADIO CORPORATION OF AMERICA,

Respondent.

BRIEF FOR RESPONDENT.

GENERAL STATEMENT.

This case comes before this Court on a writ of certiorari to review the decision of the Circuit Court of Appeals for the Second Circuit reversing a decision of the District Court for the Southern District of New York dismissing the bill of complaint (R. p. 58, 297 Fed. 518).

The District Court dismissed the bill on petitioner's motion, upon the ground that the DeForest Radio Telephone & Telegraph Company was the owner of the patents in suit, was not before the court because it had not signed the bill, but had been simply named in the caption of the bill as a party plaintiff, and had thus been joined without its consent. (R. pp. 50-53, 297 Fed. 518.)

The Circuit Court of Appeals assumed *arguendo* that the DeForest Radio Telephone & Telegraph Company was the owner of the patents in suit and then held that

respondent's license entitled it to sue in the name of the patent owner.

Questions Presented.

The questions before this Court are:

(1) Is the DeForest Company vested with the legal title to the patent in suit?

(2) Assuming that the DeForest Company is vested with such title, was it properly joined as a party plaintiff without its consent, other than that expressed in or which may be implied from the agreement of March 16, 1917, hereafter referred to?

The Facts.

(1) The suit was brought by the respondent with the DeForest Company as a party plaintiff, against the petitioner, the Independent Wireless Telegraph Company for infringement of the DeForest patents Nos. 841,387 and 879,532, relating to improvements in vacuum tubes for radio purposes.

The bill alleges that the DeForest Company has certain rights in the patents; that before the bill was filed the DeForest Company was requested to join as a party plaintiff, but declined; that it is a Delaware corporation and outside the jurisdiction of the court, and therefore could not be made a defendant. Consequently, in order to prevent a failure of justice and enable the respondent to protect its exclusive rights under the patents, the DeForest Company is made a party plaintiff. (R. p. 7; Bill, par. 25.)

The bill is signed and verified by the respondent. It is not signed or verified by the DeForest Company or its solicitors. (R. pp. 60, 61.)

The DeForest Company is not only named in the caption of the bill, but it is one of the plaintiffs referred

to throughout the bill and it has raised no objection to being joined in this manner as a party plaintiff.

(2) The bill alleges that the Telephone Company is a New York corporation, and a citizen, resident and inhabitant of the Southern District of New York; that it has certain rights and interests in the patents in suit, and that before bringing the suit it was requested to join as a plaintiff, but declined, and therefore was made a defendant. (R. p. 1, Bill, Pars. 3, 4.)

The Telephone Company has made no objection to being joined as a party defendant.

(3) The charge of infringement is based upon the use by the petitioner, at its shore stations, in **receiving commercial* wireless telegraph communications for pay or profit, particularly from ships and vessels, of the patented tubes sold or disposed of by the respondent and purchased or acquired by the petitioner with notice and knowledge that the tubes were licensed for amateur or experimental purposes only. (R. pp. 4, 6; Bill, Pars. 16-22.)

(4) Prior to March 16, 1917, the entire right, title and interest in the patents in suit was vested in the DeForest Company, except for certain licenses then outstanding in the Telephone Company. (R. p. 2, Bill, Par. 7.)

Thereafter additional and extensive rights in the patents in suit were transferred by *mesne* assignments to the Telephone Company.

The rights of the DeForest and Telephone Companies and the respondent in the patents in suit, at the time of the infringement and the bringing of the suit, are based upon the following agreements pleaded in and made a part of the bill. (R. pp. 2, 3, Bill, Pars. 8, 9.)

---

*Italics used herein are ours unless otherwise stated.

THE DEFOREST-WESTERN ELECTRIC COMPANY AGREEMENT.

(1) On March 16, 1917, the DeForest Company and the Western Electric Company entered into an agreement which recited that the former owned and controlled the patents in suit and other patents and applications referred to in schedules A and B, subject to certain rights granted to one Meyers, then owned by the Telephone Company, and that the Western Company desired to acquire rights in such patents and applications. (R. p. 2, Bill, par. 8, Agt. R. p. 17.)

After granting a "license" "*free from all royalties or other payments*" except the consideration mentioned in the agreement and after referring to the schedules and other details, the agreement provides (R. p. 18) that:

> "The said license is granted and to be granted under United States patents only, and for the full terms of the said patents granted or to be granted, and the license is granted for *all transferable rights of said DeForest Company of any kind or nature whatsoever in said inventions, patents and applications,* except the rights hereinafter expressly reserved to itself by the DeForest Company. The said license granted and to be granted to the Western Company is *exclusive* except for the aforesaid rights now held by the American Telephone and Telegraph Company and except for the rights expressly reserved herein by the DeForest Company."

(2) The reserved rights are stated in the agreement (R. pp. 18, 19) as follows:

> "(1) *Non-exclusive* assignable rights to make, use and sell for the synthetic production of music."
>
> (Sub-divisions (2) and (3) do not relate to the patents in suit.)
>
> "(4) *Non-exclusive, non-transferable, personal* rights with respect to radio communication, under

all the patents, applications and inventions included in this agreement, for the following purposes only:

"(a) To *make* for and *sell* to the United States Government for its use;

"(b) To *make* for and *sell* to amateurs for use solely by said amateurs;

"(c) To *make* for and *sell* to private users *who do not, for pay,* transmit or receive messages or establish communications, for use only in establishing communication between different offices or departments of the same business;

"(d) To *make* and *sell* for use on ships *which do not, for pay,* transmit or receive messages or establish communications;

"(e) To *make* and *use* for the radio *distribution* of news and music;

"(f) To *make* and *sell* for use receiving apparatus for the reception of said news and music *but not for use in receiving messages for pay.*

"(g) To *make, use* and *sell* to others for use in the reproduction of words or music from telegraphone and graphophone records."

(3) The agreement also provides:

"that the Western Company, its successors, legal representatives and assigns, and the DeForest Company may, respectively, institute and conduct suits against others for infringement of any of said patents within the fields in which it possesses rights, but all of such suits shall be conducted at the expense of the party bringing them, which party shall be entitled to retain any judgment recovered in any such suits" (R. p. 19).

(4) Under the agreement

"the Western Company, its successors and assigns may transfer to others, in whole or in part, the rights granted by this instrument, and may assign

rights hereunder, or grant licenses to various persons, firms or corporations for the several uses to which the inventions are applicable." (R. pp. 20, 21.)

(5) On May 24, 1917, the Western Company transferred to the Telephone Company all of the former's right, title and interest in, to and under this agreement of March 16, 1917. (R. pp. 21, 22.)

Thus, *all rights* granted by the patent in suit, except the *non-exclusive* rights reserved by the DeForest Company, resided in the Telephone Company on and after May 24, 1917.

THE EXCLUSIVE LICENSES OF THE RESPONDENT.

(1) On November 20, 1919, the General Electric Company entered into an agreement with the respondent by which it granted to it certain licenses, including a non-exclusive license, to make under certain conditions, and an *exclusive* license, to *use and sell* devices for radio purposes under all patents, applications for patents, inventions and rights or licenses under or in connection with patents then owned by the General Electric Company *or thereafter acquired by it.* (R. p. 3; Bill, Par. 9, R. pp. 22, 23.)

At the time this agreement was entered into the General Electric Company had no interest in the patents in suit.

(2) On July 1, 1920, however, the Telephone Company and the General Electric Company entered into an agreement which conferred upon the General Electric Company certain rights and licenses under the patents in suit. These licenses included

(A) "exclusive licenses in the field of wireless telegraphy", (R. p. 38, Art. V, Sec. 2 (b)) and

(B) "exclusive licenses to make, use, lease and

sell all wireless telephone apparatus for amateur purposes." (R. p. 40, Art. 5, Sec. 4 (d) (4).)

The Telephone Company reserved a non-exclusive license to make and sell to the Government for Government, but not for commercial or toll uses, or for resale. (R. p. 38, Art. V, Sec. 1.)

It also reserved a non-exclusive license in the wireless telegraph field for its own communication or for convenience or to save expense in connection with its commercial operation of wire telegraphy and wire and wireless telegraphy, but not for profit or in transmitting messages for the public. (R. p. 37, Art. IV, Sec. 2; R. p. 38, Art. V, Sec. 2.)

(3) Under an agreement, also dated July 1, 1920, between the General Electric Company, Telephone Company, respondent and Western Electric Company, the Telephone Company consented to the extension by the General Electric Company of any of the rights the latter company acquired under its license agreement with the Telephone Company. (R. pp. 47, 48.)

The respondent, by virtue of the agreements referred to, thus acquired *exclusive* licenses under the patents in suit in the field in which the Independent Company is alleged to have infringed, viz.: the *commercial* wireless telegraph *receiving* field for toll or profit. Neither the owner of the legal title to the patents, or anyone else, has any rights in that field.

Such were the findings of the Court of Appeals in *Radio Corporation* vs. *Emerson*, 296 Fed. 51, certiorari denied 265 U. S. 582, and the District and Court of Appeals in the present suit. (R. pp. 51, 60.)

INJURY TO THE RESPONDENT BY THE INFRINGEMENT.

(1) Since July 1, 1920, the respondent, acting under its exclusive licenses, has constructed, maintained and

operated wireless telegraph shore stations, equipped with and employing the patented apparatus, in commercial wireless telegraph transmission and reception for pay or profit with vessels at sea and on the Great Lakes. The respondent built up and has a profitable business in such system of commercial communication, and has a large amount of capital invested therein. (R. pp. 5, 6, Bill, pars. 15, 16.)

This business was seriously interfered with by petitioner's infringement and resulted in serious injury, loss and damage to the respondent. (R. p. 6; Bill, par. 23.)

RESPONDENT CONTENDS:

(1) That title to the patents is in the Telephone Company.

(2) That even if it is held to be in the DeForest Company the suit has been properly brought in its name.

ARGUMENT.

I.

TITLE TO THE PATENTS IN SUIT WAS ASSIGNED TO THE TELEPHONE COMPANY AND THE DEFOREST COMPANY BECAME A MERE NON-EXCLUSIVE LICENSEE.

Petitioner's brief does not discuss in any detail the question of the ownership of the legal title to the patents in suit, but assumes that it is in the DeForest Company.

As appears by the decisions of the courts, that prior to this suit there had been some controversy as to whether this legal title was in the DeForest Company or the Telephone Company. *Radio Corporation* v. *Hohenstein*, 289 Fed. 758. *Same* v. *Emerson, supra; infra*, pp. 14, 15 and *DeForest* v. *Radio Corporation*, 3 Fed. (2nd) 847, referred to in petitioner's brief.

Respondent has always contended that the title was in the Telephone Company.

The DeForest Company has been brought into this and other suits merely to protect respondent in the event that the DeForest Company is eventually held to have title.

1. The Combination Necessary to Vest Title.

The location of title to the patents in suit depends upon the legal effect of the agreement of March 16, 1917.

An *assignment* is an instrument in writing which conveys the exclusive right to make, use and sell, in the whole or any part of the United States, the whole invention or an undivided part thereof, subject only to the outstanding rights of licensees. It vests the monopoly of the patent, except for such licenses and also the legal title to the patent, in the assignee.

When the transfer is of an interest short of an assignment it is a license and conveys no title, but simply the right to practice the invention of the patent. *Waterman* v. *Mackenzie*, 138 U. S. 252.

A license amounts to nothing more than a covenant by the patent owner not to sue, or a waiver of the right to exclude.

The patent monopoly is a combination of the common law right to practice the invention and the power to exclude others from practicing the invention in any way. *Bloomer* v. *McQuewan*, 14 How. 539, 540; *Paper Bag Case*, 210 U. S. 405; *Crown Co.* v. *Nye Tool Works*, 261 U. S. 24, 34-36.

The latter decision amplifies the previously understood doctrine of the *Paper Bag Case*, so as to make it clear that a patent includes not merely the common law right to make, use and vend, but also as an incident, the power which the Government confers to exclude others from any and all of these rights.

Without this incident, an alleged owner has no more than he had under the common law. With the incident alone, and lacking the common law right, he is not the owner. The combination is necessary to complete the concept of title.

This Court said in the *Crown* case, page 36:

> "It is the fact that the patentee has invented or discovered something useful and thus has the common law right to make, use and vend in himself, which induces the Government to clothe him with power to exclude everyone else from making, using or vending it. In other words the patent confers on such common law right the incident of exclusive enjoyment, and it is the common law right with this incident which a patentee or an assignee must have."

Therefore, the significant provisions of the agreement of March 16, 1917, the legal effect of which is to be determined in the present case, are those which have to do with the whereabouts of the rights to exclude in these three fields.

2. The Agreement of March 16, 1917.

The first granting paragraph granted to the Western Electric Company (who later transferred its rights to the Telephone Company) a "license" free of royalties to make, use and sell apparatus and systems of the patents.

This grant is then amplified to mark out clearly the rights transferred and those retained by the provision that:

> "The said license is granted and to be granted under United States patents only, and for the full terms of the said patents granted or to be granted, and the license is granted *for all transferable rights of said DeForest Company of any kind or nature whatsoever in said inventions*, patents and appli-

cations, except the rights *hereinafter expressly reserved* to itself by the DeForest Company. The said license granted and to be granted to the Western Company is *exclusive,* except for the aforesaid rights now held by the American Telephone & Telegraph Company (these are the rights transferred to Meyers), and except for the rights expressly reserved herein by the DeForest Company."

Thus the grantee acquired all transferable rights, except certain rights "hereinafter expressly reserved" and whatever rights the transferee was thus acquiring were exclusive, except for such reserved rights.

These reserved rights are set forth in the statement of facts (*supra,* pp. 4, 5).

The rights reserved vary with respect to different patents and different applications included within the schedules.

With respect to the patents in suit *no exclusive rights were reserved.*

It is submitted that in determining the question of title, each of the patents and applications must be considered as a separate subject matter. The reservation clauses, therefore, must be read individually for each patent to determine "the legal effect of the provisions", which is the canon we are to apply to determine the question of whether title has passed.

As none of the rights reserved in the patents in suit were exclusive, it is clear that the ownership of such patents passed under this grant, because the right to exclude, coupled with the common law right to enjoy the practice of the invention, is expressly transferred.

Non-exclusive reservations could not diminish the *quantum* of what had been thus transferred.

The limited nature of the rights of the DeForest Company is illustrated by the fact that it could not grant licenses under the patents after this agreement.

It was so held in *American Telephone & Telegraph Company* v. *Radio Audion Company and DeForest Company,* 281 Fed. 200, 202; affirmed 284 Fed. 1020.

The limited nature of DeForest's rights is also indicated by the fact that it was required, in selling or leasing the patented apparatus under its reserved license, to secure from the purchaser, except the Government, a written agreement covering the use to which the apparatus was to be put (R. p. 19).

The DeForest Company was also required to mark its apparatus in such a way as to indicate the sole use to which it was to be put, and such marking was required to be satisfactory to the Western Company (R. p. 19).

At the conclusion of the agreement, the transferee had become the owner of the right to make, use and sell for all purposes "apparatus and systems embodying, or made or operating in accordance with" the patents in suit; it was also vested with the sole right of exclusion against all persons in all fields—except that it could not exclude the DeForest Company from the limited fields in which its rights were non-exclusive. The combination thus transferred made the transferee the owner.

This conclusion is not weakened by the clause authorizing the Western Company to transfer its rights, assign them, or grant licenses to others. With respect to some of the patents covered by the agreement, title may not have passed (*e. g.*, where the reserved rights were exclusive). In such cases this clause would not be surplusage.

Therefore, after May 24, 1917, and during the remaining term of the patents and throughout the United States and its territories, the Telephone Company, as the assignee of the Western Electric Company, became vested with the title.

3. Under the Authorities Title is in the Telephone Company.

The authorities which have had to do with similar documents and similar controversies are in agreement that a transfer like the one in suit conveys the title.

A. In *Sirocco Engineering Co.* v. *Monarch Ventilator Co.*, 184 Fed. 84 (S. D. N. Y.), there was a grant of the "sole and exclusive *license* to manufacture, sell and use" except for specified reservations, *e. g.*, certain special uses of the patent for which was reserved to the grantor, the "sole and *exclusive* right to manufacture, use and sell". The court held that the ownership passed to the transferee and that the grantor retained a mere license. It is to be noted there that among the rights retained by the grantor were certain "exclusive" rights. The Court said of the document:

> "I think that the instrument, although called a license, was in legal effect an assignment. It was a grant of the patent with the reservation of a license to the grantor."

B. In *Frankfort Whiskey Process* v. *Pepper*, 26 Fed. 336 (S. D. N. Y.), there was a grant in general terms of the entire right to make, use and sell, but reserving a license to use to the extent of a certain daily limited manufacture and also reserving the right to license others. It was held that the grantee became the owner under this grant and could maintain a suit for infringement. Here again it is to be noted that among the rights retained by the grantor was a right to license others. Nevertheless, the general power of exclusion was found to be in the grantee and hence it was held that he had the title.

C. In *Griggs, Cooper & Co.* v. *Erie Preserving Co.*, 131 Fed. 359 (W. D. N. Y.), there was a transfer of rights under a trade-mark to the plaintiff in certain states, but

reserving a use in those States to the transferor on certain conditions. The court held that the plaintiff acquired ownership under this transfer and could maintain a suit for infringement.

D. In *Andrew Jergens & Co.* v. *Woodbury, Inc.*, 273 Fed. 952, affirmed 279 Fed. 1016 (Delaware), the court had before it a document purporting to grant "the exclusive license to use the aforesaid neckless head trademark" except in so far as conflicting rights had theretofore been granted to others and except as to the right of the grantor to use the same so long as it continued in business. This court held that that document effected a complete transfer of the ownership, subject to a license reserved by the grantor. In reaching this conclusion, the court relied on the case of *Sirocco Engineering Co.* v. *Monarch Ventilator Co., supra.*

E. Reference may also be made to *Pope Manufacturing Company* v. *Clark*, 46 Fed. 789 (Maryland), in which, by an agreement contemporary to an assignment of a patent, the grantor reserved the right to make, use and sell the invention and the grantee agreed not to make a certain device under the invention then being made by the grantor. It was held that the grantee could maintain an action for an infringement because he had the title and that the grantor was a mere licensee.

The patents in suit have been involved in other litigation in the Federal courts in suits brought by the respondent and others against infringers. There are direct intimations in some of the opinions that the document of March 16, 1917 transferred the ownership from the DeForest Company.

F. Judge A. N. Hand, of the Southern District of New York, has squarely held that title passed to the Telephone Company in an opinion, unreported, in *Radio Corporation* v. *Emerson.* He said:

"The important words of transfer in the present instrument (March 16, 1917) were the words: 'For all transferable rights', etc. These reserved rights, however important, were in terms but 'non-exclusive, non-transferable personal rights'. The residual rights in the patents passed by conveyance. What was reserved was apparently a most extensive personal license. What was left was what would be called in the case of land, a fee. *Littlefield* v. *Perry*, 21 Wall. 222."

The Court of Appeals and the District Court in the present case (R. p. 51; 297 Fed. 518; R. p. 59; 297 Fed. 521) have both expressed the view that all interest in the patents in suit, except that reserved, passed by the document of March 16, 1917, and that the DeForest Company retained merely a non-exclusive right.

The District Court said (R. p. 51):

"The Western Company later assigned all its rights in the contract to the American Telephone & Telegraph Company, in whom thereupon there vested all interest in the patents in suit except those reserved to the DeForest Company as above stated."

And again (p. 52) he states:

"So viewed, all parties are before the court who have any interest in the patents in suit (including 879,532) except the DeForest Company, *and the interests of that company are merly a non-exclusive and personal right to make, sell and use the inventions for its own profit.*"

The Circuit Court of Appeals said (p. 59):

"The Western Company assigned all its rights in the contract to the American Telephone & Telegraph Company, *and therefore all interest in the patents in suit, except that reserved by the DeForest Company vested in the American Telephone & Telegraph Company.*"

4. The Authorities Do Not Support Title in the DeForest Company.

The District Court in this connection cited *Gayler* vs. *Wilder,* 10 How. 477 and *Waterman* vs. *Mackenzie, supra.*

Upon a preliminary hearing in the case of *DeForest* v. *Radio Corporation,* 3 Fed. (2nd) 847, the District Court of Delaware said that, although the question of title was a close one, the Court was inclined to think that title was in the DeForest Company, citing *Littlefield* v. *Perry,* 21 Wall. 205; *Waterman* v. *Mackenzie, supra;* and *Crown Co.* v. *Nye Tool Works, supra.*

The decisions in the cases cited, it is respectfully suggested, do not support the position that title is in the DeForest Company, but lend very weighty support to the contrary position.

A. *Gayler* v. *Wilder* was an action *at law* brought by Wilder alone, the owner of the patent, against Gayler for infringement by the manufacture and sale of safes. Wilder, by an agreement, granted to a third party, Herring, the sole and exclusive license to *make and sell only* the patented safes in the City and State of New York and nowhere else, on the payment of certain royalty. Wilder reserved to himself the right to manufacture the safes in the State of New York, provided the manufacture was not within fifty miles of the City of New York, and to sell them outside of the State, but if sold within New York State, he was to pay Herring the same royalty that Herring agreed to pay him.

The defense contended that Wilder had parted with all his interest in the patent by virtue of the agreement with Herring, so that Wilder could not maintain the action. The court held that the agreement was not an assignment of an undivided interest in the whole monopoly, nor an assignment of an exclusive right to the entire monopoly in the State or City of New York, but was a mere license, leaving the title to the patent in

Wilder, by whom the action was properly brought. Reference will later be made to some dicta in this decision, on which the District Court may have placed some reliance.

B. In *Littlefield* v. *Perry* the documents of transfer were very similar to those now before the court. Littlefield, the patentee, and Perry, the transferee, executed two documents contemporaneously. One granted all the right, title and interest in the patent in consideration of a fixed, continuing payment by the transferee. The other reserved to the grantor the *exclusive* use of the invention in a particular field. There was also a provision that the grantor should protect the grantee against suits for infringement, and that the grantor should sue infringers "in his own name". Perry, the transferee, sued Littlefield, the patentee, for infringement. The defense was that Perry had no suable title, that the transfer conferred a license only; and it was pointed out that the right to sue under the contract was in Littlefield,—but the court held that the transfer was an assignment, and that the reservation left a mere license in the patentee.

This part of the decision entirely disposes of whatever reliance in the case at bar may be placed upon the dictum in *Gayler* v. *Wilder*, in which Chief Justice Taney remarked:

> "But in order to enable him to sue, the assignment must undoubtedly convey to him the entire and unqualified *monopoly* which the patentee held in the territory specified, excluding the patentee himself, as well as others, and any assignment short of this is a mere license."

That dictum is, of course, entirely sound when the word "monopoly" is properly understood. It is not to be taken, however, and *Littlefield* v. *Perry* expressly so held, as preventing the retention of a non-exclusive license

when the patentee makes an assignment which conveys the title.

The provision with respect to bringing suits in *Littlefield* v. *Perry* was, if anything, a better argument, that the grantor retained title, than is the corresponding provision in the agreement of March 16, 1917.

In *Littlefield* v. *Perry*, this power was conferred on Littlefield only; in the present case, it is recognized as existing in both parties. The court, however, had no difficulty with it in the *Littlefield* case, but said:

> "It needs only a slight examination of that clause of the contract, however, to become satisfied that it was intended only as a provision for placing on Littlefield the cost and expenses of such litigation, as well as all damages for infringement growing out of the use of the invention by the assignees." See also: *Rude* v. *Wescott*, 130 U. S. 152.

The paragraph as to suits, etc., in the present case obviously was inserted as a power to sue by either party and to avoid disputes between them over costs and recoveries in such suits, and not as an endowment of title on either party. It was intended to be equally effective as to either party regardless of who held title.

C. In *Waterman* v. *Mackenzie*, the owner of the patent first gave to Waterman "the sole and exclusive right and license to *manufacture and sell* fountain pen holders, containing the patented improvement, throughout the United States." (The right to use, it may be noted, was not included.) Thereafter, the owner transferred by mesne assignments (by way of a mortgage) to one Shipman the whole patent and invention "except a license to the said Lewis E. Waterman to manufacture and sell pens" (the aforementioned license). Subsequently the owner purported to transfer the entire right, title and interest to Waterman. Waterman brought suit against an infringer, but the court held that

he could not maintain the action for lack of a suable title, because the "whole title" was in Shipman (to use the language of Mr. Justice Gray).

It is to be noted there that whatever rights Shipman received were diminished by and subject to the important *exclusive* licenses then outstanding in Waterman, and that when these exclusive licenses are compared with the non-exclusive rights reserved by the plaintiff in the present suit, the importance of the decision in *Waterman* v. *Mackenzie* is apparent.

The legal effect of the provisions in *Waterman* v. *Mackenzie* was to transfer much less than was transferred by the document of March 16, 1917, to the Western Electric Company. By that rule of construction, the case is an important authority for the respondent.

D. *Crown Co.* v. *Nye Tool Works* did not involve the construction of documents of title.

The case held that the assignee of claims for damages, profits, etc., then existing or subsequently arising against a single infringer, together with the right to exclude that particular infringer, acquired no right or interest in the patent and was not entitled to sue under the patent laws without joining the owner of the patent. The words transferring these rights in that case were clear and unambiguous, and did not purport to transfer more than a mere right to sue a single infringer.

Insofar as that case in any way involves the question of the effect of a documentary transfer, it is no authority that title is in the DeForest Company.

These cases then offer no authority from which the conclusion that the DeForest Company retained title can be deduced.

It is submitted that the agreement in question must be construed according to the canon laid down by Mr. Justice Gray, *i. e.*, "upon the legal effect of its provisions", and that it is clear that the effect of these

provisions was to transfer ownership with the reservation to the DeForest Company of certain *non-exclusive* rights for specific uses.

Therefore the DeForest Company is not an indispensable or necessary party to this suit, and as the Telephone Company is properly a party defendant, the owner of the legal title to the patents is before the court.

It makes no difference on which side of the "vs" the owner is placed, for equity will conform its decree so that justice may be done and all parties protected. *General Equity Rule 37; Littlefield* v. *Perry, supra; Radio Corporation* v. *Emerson, supra.*

Assuming, however, that title is vested in the DeForest Company, the suit has been properly brought in its name.

II.

THE DEFOREST COMPANY WAS NOT JOINED AS A PARTY WITHOUT ITS CONSENT.

1. The Express Consent of the DeForest Company.

The clause of the agreement of March 16, 1917, with reference to suits for infringement, provides that not only the DeForest Company, but the Western Electric Company, and its assigns, may institute suits for infringement of the patents in the field in which they possess rights (R. p. 19).

At the time this agreement was made it was a well known rule of law that a licensee could not sue alone to protect the licensed rights, but that such a suit should be brought through or in the name of the patent owner at law, and in equity, joining the licensee as a party if necessary to protect the rights of all parties. R. S. Sec. 4919. *Waterman* v. *Mackenzie, supra.*

In view of this rule, it must have been the intention of the DeForest Company by the clause as to suits, assuming for the sake of argument that title did not pass, to grant to the Telephone Company and its sub-licensees the power and authority to bring a suit for an infringement in the field of its licensed rights, in the name of the DeForest Company or by joining it as a party.

As the rights of the Western Electric Company were freely transferable there is no reason why this right was not also conferred on respondent, who derives its exclusive license indirectly from that Company and the DeForest Company.

Moreover, as will be later pointed out, the right of an exclusive licensee to sue, in the name of the licensor or patent owner, or to join him in a suit, to protect the licensed rights from invasion, is implied from the license contract.

It is therefore submitted that the DeForest Company, assuming that it had not parted with the title to the patent, was not made a party plaintiff without its consent, but was joined under the power and authority expressly granted by it in the agreement of March 16, 1917.

2. The DeForest Company Was Joined as a Party With Its Consent Implied from the Agreement of March 16, 1917.

This point is not new. The principle on which it rests was adopted and approved in the following cases prior to the decision of the Court of Appeals in the present case: *Brush Electric Co.* v. *California Electric Co.*, (9 C. C. A.) 52 F. R. 945, 952-954; *Excelsior Wooden Pipe Co.* v. *Allen,* 104 F. R. 553 (9 C. C. A.); *Excelsior* v. *Seattle,* 117 F. R. 140 (9 C. C. A.); *Hurd* v. *Goold,* (2 C. C. A.) 203 F. R. 998; *Brush-Swan Electric Co.* v. *Thompson-Houston,* 48 F. R. 224 (Conn.); *Radio Cor-*

poration v. *Emerson, supra; Chisholm* vs. *Johnson,* 106 F. R. 191, 212 (Del.); *Goodyear* v. *Bishop,* 2 Fish. Pat. Cas. 96; *Goodyear* v. *Burney,* 3 Blatch. 32.

See also *Walker on Patents* (5th Ed.) Sec. 400; *Foster Federal Practice* (6th Ed.) 689, Sec. 112; *Hopkins on Patents,* 504, Sec. 376.

The principle of these cases is based upon the fact that the owner of the patent has granted exclusive rights thereunder which are being infringed. Such rights cannot be protected from infringement except by a suit in which the patent owner is a party. The owner is given an opportunity to appear voluntarily in such suit, but he cannot or will not join as a plaintiff and cannot be made a defendant because he is outside the jurisdiction of the Court.

Under such circumstances, the right of the licensee to join the owner as a party plaintiff, or to sue in his name, is implied from the license contract, and he is in court on his implied consent. This is necessary to prevent a *failure of justice,* as the exclusive licensee would otherwise be without a remedy to prevent the continued invasion of his exclusive rights.

The patent owner's refusal to join in the suit is an interference with, and tends to defeat the license granted by him.

The situation in the case at bar is in principle the same as if the patent owner were the infringer, for the patent owner, in effect, is aiding the continued infringement by refusing to join in a suit against the infringer.

Under such circumstances or where the patent owner cannot sue and is within the jurisdiction of the Court, Courts of Equity have allowed the suit to proceed for the benefit of the licensee by permitting him to make the owner a party defendant. *Littlefield* v. *Perry, supra, Libbey Glass Co.* v. *McKee,* 216 Fed. 172, 178; affirmed 220 Fed. 672; *Wilson* v. *Chickering,* 14 Fed. 917, 919; *Brammer* v. *Jones,* Fed. cases 1806; 4 Fed. Cases 11, 12.

The Court of Appeals very properly did not leave such an exclusive licensee as the respondent, owning valuable and exclusive rights under these important patents, without a remedy for the infringement of such rights.

The Court of Appeals decision therefore was not only based on authority but is sound in principle and is in the furtherance of justice.

The District Court, however, held that the doctrine of the *Brush* and other cases where the patent owner was joined as a plaintiff by the licensee was no longer in force, in view of the decision in *Crown* case, while the petitioner contends that the Court of Appeals decision is inconsistent with the *Crown* case.

3. The Doctrine Formulated in the Brush Cases Has Not Been Disturbed by this Court.

The decision of the District Court in the present case was, we believe, engendered by a misapprehension of the facts and of the holding in the *Crown* case. In his opinion, Judge Learned Hand stated (R. p. 53) that in the *Crown* case

> "The owner had given the plaintiff an express *license* to sue an infringer on the plaintiff's own behalf. This the *licensee* did and was defeated for defect of title. I cannot suppose that this decision turned only upon the failure of the plaintiff to add the name of the *owner* to the caption, because the whole discussion forbids it and because the bill in that event would certainly not have been dismissed without leave to plead over. The defect was one of substance going to the insufficiency of the plaintiff's title, which could have been cured only by the actual presence in the suit of the *owner*."

The *Crown* case involved the validity of a new form of *assignment*. The assignment was an attempt to convey an interest in the patent against one infringer with

the right to sue him, without joining the owner of all other right, title and interest in the patent.

The plaintiff there *had no license* to practice the invention of the patent in suit, either exclusive or non-exclusive; it had no right to make, to use, or to sell the patented apparatus for any purpose.

It is respectfully submitted that the point actually decided in the *Crown* case was that the assignment there considered did not transfer any part of the title or interest in the patent. The assignee had no right to protect or exclude, and he did not acquire the right to sue without joining the owner of the patent as a party to the suit.

We also submit that the opinion of the District Court in the present case and petitioner's brief show a substantial misconception of the facts of the *Crown* case and of the scope of the decision therein. We fail to see how that case is inconsistent with the Court of Appeals decision in this suit or affects the doctrine of the *Brush* cases.

As stated, the fundamental theory of those decisions is the implication of the grant of a right to *protect* an *exclusive* license, such implied right arising by practical necessity by virtue of the *exclusive* nature of the license granted. There being no such necessity under the facts of the *Crown* case, the question of whether such implied right was granted could not arise.

Petitioner's brief in this connection (pp. 13, 14) refers to the cases of respondent against *Hohenstein* (289 Fed. 757) and respondent against *Emerson* (296 Fed. 51).

In the former case the Court of Appeals followed this court's decision in the *Crown* case, as the respondent was suing *alone* on an assignment similar to that in the *Crown* case, and not as an exclusive licensee.

In the *Emerson* case an amended bill was filed. After Judge A. N. Hand's decision under the original bill, in which respondent also sued alone on the same form

of assignment and not as an exclusive licensee, the De-Forest Company joined and signed the amended bill as a party plaintiff, and in which the Telephone Company (who was within the jurisdiction of the Court) was joined as a defendant. When the case reached the Court of Appeals, it was conceded that title to the patents in suit was in the Telephone Company, but Emerson contended that the respondent was not an exclusive licensee, was not a proper party, and that the suit could not be prosecuted with the Telephone Company, the owner of the patent, as a party defendant. The Court of Appeals held that the respondent was an exclusive licensee in certain fields, and as such had the right to join the Telephone Company as a defendant where it refused to join as a plaintiff in the suit for infringement of respondent's exclusive rights. The Court also held that the question of ownership as between the two claimants who were parties could be determined at the trial, and that a decree could be made protecting all parties whether the owner appeared as plaintiff or defendant (296 Fed. 51; certiorari denied, 265 U. S. 582).

It is submitted that the doctrine of the *Brush* cases is not merely one of justice and convenience but is also in accord with the rules established in analogous cases.

III.

THE ANALOGY OF ASSIGNMENTS OF CHOSES IN ACTION AT COMMON LAW.

At common law, a chose in action was not assignable. This rule, however, did not prevent courts of law giving the assignee a remedy; he was permitted to sue in the name of his assignor, and he did not have to, and in fact could not, go into a court of equity to do so. 3 *Pomeroy's Equity Jurisprudence* (4th Ed.) 3064, section 1272; *N. Y. Guaranty Co.* v. *Memphis Water Co.*, 107 U. S. 205.

Also, the court of law protected an assignee of such a character against a hostile assignor. As this Court (Justice Story) said in *Mandeville* v. *Welch,* 5 Wheat. 277, at page 283:

> "It has been long since settled, that where a chose in action is assigned by the owner, he shall not be permitted fraudulently to interfere and defeat the rights of the assignee in the prosecution of any suit to enforce those rights."

In that case (which was dismissed on the ground that the assignment was only partial), it appears that the action had not been authorized by the assignor (pages 279-280).

The assignee's right to sue at law in the name of his assignor is based upon a term, implied by law in every assignment of a chose in action, by which there is granted to the assignee a power of attorney to sue in the name of the assignor. *James* v. *Newton,* 142 Mass. 366, 371; *Duffield* v. *Elwes,* 1 Bligh. N. R. 497, 506 (English); *Williston on Contracts,* section 408; 1 *Spence Eq. Jur.* (1846) 181; 2 *Blackstone's Comm.* 442.

The phrase "in the name of", as used in Section 4919 of the Revised Statute had, at the time of its first enactment of the patent statute of 1836, a well understood meaning. It had acquired such a meaning in connection with actions on assigned choses in action where it was used to refer to actions brought by an assignee when he joined his assignor as a nominal co-plaintiff, whether with or without the latter's consent.

Therefore, the rules of statutory construction require that that meaning be given the words here. *The Abbotsford,* 98 U. S. 440.

Further, another rule of statutory construction sustains respondent's contention, viz.: that every word in a statute is presumed to have been placed there for a purpose. *U. S.* v. *Ninety-nine Diamonds,* 139 Fed. 961, 963. Thus, Congress, using the words "in the name of"

instead of merely "by", authorized actions to be brought in the manner of actions on assigned choses in action—as was the case at bar.

IV.

THE ANALOGY OF ASSIGNMENTS OF CLAIMS FOR DAMAGES FOR PAST INFRINGEMENT.

The assignee of a claim for damages on account of the infringement of a patent is today and always has been in the position of the assignee of a chose in action at common law. This is because of the limitation contained in section 4919 of the Revised Statutes to the effect that actions at law shall be brought "*in the name of* * * * patentee, assignee, or grantee." In *Waterman* v. *Mackenzie, supra,* it was held that this statutory provision was also controlling upon a court of equity.

The only difference between the assignments of choses in action at common law and assignments of claims for damages on account of patent infringement lies in the fact that the former were not recognized at law because of legal conservatism and the latter are not recognized at law because of the statute. The effect of the former could therefore be, and has been, in most jurisdictions, changed by legal progressiveness; the effect of the latter can be changed only by Congress.

Thus, the *common law rules* as to assignees of choses in action apply today with complete analogy to assignments of rights under Letters Patent which do not, technically, pass an *interest* in the title to the patent; in each case, the assignment passes no title which is recognized by a court of law but does, nevertheless, give to the assignee a right which such courts will protect.

Thus, the assignee of an infringement damage claim may sue at law in the name of his assignor—following R. S. sec. 4919 explicitly. (*Crown* v. *Nye, supra.*)

Such assignee could not formerly sue in equity in

his own name (*Hayward* v. *Andrews,* 106 U. S. 672), nor can he do so under modern revised practice (*Crown Co.* v. *Nye, supra*).

Since the right to sue in the assignor's name is based upon a power of attorney, which is implied at law, it necessarily follows that the assignee may invoke that right whether or not the assignor expressly consents and whether or not he objects to such use of his name. *Massachusetts Co.* v. *Kidd,* 142 Fed. 285, 286; *Foss* v. *Bank,* 111 Mass. 285; *Bates* v. *Kempton,* 73 Mass. (7 Gray) 382; *Grover* v. *Grover,* 24 Pick. (Mass.) 261; *Sumner* v. *Sleeth,* 87 Ill. 500; *St. Albans Co.* v. *Elwell,* 88 Vt. 479.

There are *dicta* in certain cases (see *Hayward* v. *Andrews, supra,* and cases cited) to the effect that, if the assignor refuses to permit the use of his name as nominal plaintiff, the assignee may then sue in equity. It is submitted, however, that these *dicta* are not supported by the authorities and that they overlook the fundamental premise upon which the right to sue in the assignor's name is based.

The true rule is, we submit, set forth in the cases last cited—namely, that the assignee may sue at law in the assignor's name under all circumstances.

V.

THE RULE OF THE ANALOGOUS CASES SHOULD BE APPLIED HERE.

An exclusive licensee under a patent stands in a position very closely analogous to that of the assignee of a claim for past damages. He is entitled to relief because of a contract with his licensor but he cannot sue in his own name because of a limitation imposed upon him by law. If he is not given such relief, his license rights are seriously impaired.

The law side of the court has worked out a remedy in the analogous case of an assignment: if equity does not apply such remedy in the case of an exclusive license, we would have a situation where equity fails to give relief although law does give relief to the fullest extent of which legal judgments are capable.

In the *Brush* cases, equity afforded such relief, and we submit that the rule established by those cases is more logical than the settled rule permitting the joinder, by the exclusive licensee, of the patent owner as a party defendant under certain circumstances. The rule of the *Brush* cases comes strictly within the terms of the statute which is more than can be said of the other rule.

If equity is sufficiently liberal to permit the patent owner to be brought before it as a defendant for the purpose of protecting an exclusive licensee, we fail to understand why it should not, for the same purpose, be sufficiently liberal to interpret the phrase "in the name of", as used in sec. 4919 R. S., according to the recognized meaning of that phrase at the time of the enactment of the statute. In fact, as has been already stated, such interpretation must be made.

We also fail to understand why the power of attorney should not be implied for the purpose of making effective the exclusive license as well as for the purpose of making effective an assignment of a claim for past damages.

Therefore, it is submitted, section 4919 of the Revised Statutes expressly authorizes the joining the De-Forest Company as a co-plaintiff herein in the manner in which it is joined.

Several points are attempted to be made against respondent's contentions herein; they include (1) the alleged division of the patent monopoly through the possibility that the petitioner would be subjected to other suits; (2) that respondent is not such an exclusive licensee as can avail itself of the rule established in the *Brush* cases; and (3) that this suit is not brought "in the name

of" the DeForest Company within the meaning of that rule and the statute.

VI.

PETITIONER WILL NOT BE SUBJECTED TO FURTHER SUITS FOR THE SAME INFRINGING ACT AND THERE IS NO DIVISION OF THE MONOPOLY OF THE PATENTS.

The main objection of the petitioner to the procedure adopted herein is that it will be subject to a second suit for recovery by the DeForest Company and on this ground it rests its contention of dividing up the monopoly of the patents.

The possibility that petitioner may be sued by the DeForest Company alone or with others for other infringement in fields other than those which are exclusive in the respondent, or in other words, for a different infringing act is beside the point. There is no rule against separate suits by the proper party or parties on account of each separate act of infringement whether based on the invasion of exclusive licensed rights or the patent owner's interest.

No evils have or will arise out of such procedure. It does not result in the division of the monopoly of the patent within the same limits, as might have been the result if the assignment in the *Crown* case to exclude a single infringer had been sustained and the assignee had been permitted to sue the infringer, without joining the owner of all other rights and interests in the patent.

Furthermore under the facts in the case at bar there is no legal possibility of a second suit by the DeForest Company or the respondent against the petitioner on account of the acts charged in the bill as infringement.

The decree herein will be *res adjudicata* in any subsequent suit brought against the petitioner for the same infringement, whether brought by the DeForest Company or any exclusive licensee; for the patent owner would be a necessary party thereto and the doctrine of *res adjudicata* would apply.

Even the District Court in the present case pointed out that the petitioner could not be subjected to a second suit for the acts charged in the present suit. That court said (R. p. 52):

> "The reason usually given for the doctrine is that the infringer will be subject to two suits unless all the parties are joined who have an interest in the patent. Yet, so far as I can see, if the outstanding interest is only a personal right to make, sell and use the invention, there is no possibility of a second suit. The licensor in that case, having no right to exclude anyone, could not sue the infringer."

The present case, under the pleadings, involves no possible infraction of any exclusive rights except those of the respondent, since it and it alone owns all rights in the field of receiving commercial wireless telegraphy for pay or profit, which was invaded by the petitioner; neither the DeForest Company, General Electric Company, nor the Telephone Company has reserved any rights in that field, either exclusive or non-exclusive.

The non-exclusive right of the DeForest Company to distribute news emphasized in petitioner's brief is not in the infringing field. Neither is the Telephone Company's limited right for wireless telegraphy, in the infringing field.

If the DeForest Company alone, as owner of the legal title, should bring a suit against the petitioner on account of the acts charged here, the respondent, as exclusive licensee, would, we submit, be a necessary party thereto.

As the Court of Appeals said in the *Emerson* case, *supra*:

> "In suits for infringement for invasion of the fields covered by these licenses, the appellants could, in equity, properly plead the absence of the Radio Corporation as a party."

See also: *Waterman* vs. *Mackenzie, supra; Birdsell* v. *Shaliol,* 112 U. S. 484; *Daimler* v. *Conklin,* 145 Fed. 955, 956; *Chisholm* v. *Johnson,* 106 Fed. 191, 212; *Wallach* v. *Wigmore,* 87 Fed. 469; *Dietz* v. *Ham Co.,* 47 Fed. 320, 321; *Hammond* v. *Hunt,* Fed. Case No. 6,003; 4 Ban. & A. 111.

The decision herein would also then be *res adjudicata* as against the petitioner, and that would be sufficient to defeat the suit.

In a case such as that at bar, none of the patented rights which are infringed remain in the patent owner. Whether he joins as plaintiff willingly or not, he can be nothing more, in the eyes of an equity court, than a nominal or formal party. He has no existent or potential substantial rights which are to be protected—he is only a necessary party because the statute makes him so.

The fact that he has certain non-exclusive license does not make him a necessary party to a patent infringement suit.

Walker on Patents (5th Ed.), sec. 400; *Blair* v. *Lippincott Glass Co.,* 52 Fed. 226.

The DeForest Company was joined in this and other suits so that all questions might be determined and if it was eventually held to be vested with title, the suit would not fail because of its absence as a party.

Under the circumstances of this case, as above set forth, it is submitted that it is clearly immaterial to petitioner whether the DeForest Company is an actual party or whether the suit is merely brought in its name, since petitioner is not subject to further suits on account of the infringement complained of.

VII.

THE CHARACTER OF RESPONDENT'S LICENSE IS SUCH AS TO ENTITLE IT TO SUE IN THE NAME OF THE PATENT OWNER.

We believe that this point has also been properly disposed of by the Court of Appeals in the *Emerson* case. The Court of Appeals in the case at bar, quoting from its opinion in the *Emerson* case, said in respect to the licenses of the respondent had (R. p. 60):

> "the sole right to use and sell radio devices and vacuum tubes employing the inventions in suit in the fields above described where toll or profit was made; in other words, for commercial communication between ships, airplanes and automotive devices. The owner of the patents and all others were excluded from such fields. The radio amateur field is covered by a license to sell the patent devices or tubes granted to the Radio Corporation with some reservations to sell under limited conditions to the DeForest Company. With the exception of the personal non-exclusive and non-transferable license of the DeForest Company, the Radio Corporation's interest or right in this field is also exclusive. We regard these interests of the Radio Corporation as property rights, and such exclusive interests and rights were apparently very valuable. The Radio Corporation is therefore in the position of an exclusive licensee under the DeForest patents."

As already pointed out, neither the DeForest, Telephone or General Electric Companies or any one has any rights in the portion of the respondent's exclusive field in which the petitioner is infringing.

Respondent therefore has rights not only as against its licensors, but all others who invade its exclusive fields. Hence respondent's right is not a mere right by contract to prevent its licensors from infringing in its exclusive field.

The principle underlying the rule of protecting exclusive rights of a licensee applies whether the right be to make or sell or use generally or for a specific purpose or in a particular territory.

The fact that respondent has only an exclusive license for certain purposes, and not exclusive territorial rights to make, use and sell generally, or an undivided interest in the whole patent, is immaterial under the facts of the case at bar.

We need only point out that respondent does not claim to be the assignee of the patents or of any part of the title thereto; it merely claims to be a licensee under the patents, having rights which the DeForest Company, indirectly, has contracted, should be exclusive, that petitioner has infringed those rights and respondent has brought this suit in the name of the DeForest Company to prevent that infringement after the refusal of that Company to sign the bill.

In passing it may be said that this court may take judicial notice that in these days of the extensive use of patented inventions, including radio devices, and under modern industrial conditions where manufacturers specialize in certain fields, patent rights are not generally divided up territorially, but are more generally divided into fields or uses to which the inventions are applicable.

VIII.

THIS SUIT IS BROUGHT "IN THE NAME OF" THE DEFOREST COMPANY WITHIN THE STATUTE AND THE DOCTRINE OF THE BRUSH AND ANALOGOUS CASES.

The District Court held that the name of the DeForest Company had been simply added to the caption of the bill.

The DeForest Company is not only named in the caption, but throughout the bill as a party plaintiff. The

bill is signed and verified by respondent and signed by one of its solicitors.

General Equity Rule 25, stating the necessary contents of the bill of complaint, requires in the first paragraph thereof the full name, citizenship, and residence of each party; this information, so far as the DeForest Company is concerned, appears in paragraph 1 of the bill (R. p. 1). Rule 25 does not call for the signature of the plaintiff, but says:

> "If special relief pending the suit is desired the bill should be verified by the oath of the plaintiff, or someone having knowledge of the facts upon which such relief is asked."

Respondent has not here sought "special relief." However, as to this requirement, it is submitted that the Court of Appeals was correct in holding (1) that verification by respondent complies with both the terms and the spirit of the last clause of the rule (see also *Goodyear* v. *Allen*, 6 Blatch. 33), and (2) that verification is not necessary until the desired special relief be actually sought, by motion or otherwise.

As the Court of Appeals stated, the name of the DeForest Company might have been signed to the bill either by respondent or its solicitors, as its agents under the power of attorney, but we believe this Court will understand why respondent's counsel hesitated to advise such a course. If such signature to the bill is a necessary formality, the lack of it can, as stated by the Court of Appeals, be corrected by amendment.

It is respectfully submitted that the decree of the Circuit Court of Appeals should be affirmed.

JOHN W. DAVIS,
JAMES J. COSGROVE,
Counsel for Respondent,
Radio Corporation of America.

SUBJECT INDEX.

		PAGE
I	Application for permission to file brief	1
II	Grounds on which application for certiorari based	3
III	Title to the patents is in DeForest Radio Telephone & Telegraph Company	5
IV	Agreement of March 16, 1917	5
V	Rights never parted with by DeForest Company	8
VI	Litigation *re* title to patents in suit	12
VII	Authorities cited by respondent	14
VIII	Conclusion	19

INDEX TO AUTHORITIES.

Andrew Jergens Co. *v.* Woodbury (273 Fed., 952) ... 19

Crown Co. *v.* Nye Tool Works (261 (U. S., 24) 9, 11, 15

DeForest *v.* Radio Corporation (3 Fed. [2nd] 847) ... 2, 14

Frankford & Co. *v.* Pepper (26 Fed., 336) 17

Gamewell Fire Alarm Telegraph Co. *v.* Brooklyn (14 Fed., 255) 15

Gaylor *v.* Wilder (10 How., 477) 7, 14, 16, 18, 19

Great Northern Railroad Co. *v.* U. S. (208 U. S., 452). 4

Griggs, Cooper & Co. *v.* Erie Preserving Co. (131 Fed., 359) 18

Littlefield *v.* Perry (88 U. S., 205) 6, 11, 14, 16, 17, 18, 19

Pope Manufacturing Co. *v.* Clark (46 Fed., 789) 17

Pope Manufacturing Co. *v.* Gormully (144 U. S., 248) 16

Radio Corporation *v.* Independent Wireless Telephone Co. (297 Fed., 520) 11

Russell *v.* Boston Card Index Co. (276 Fed., 4) 16

Sirocco Engineering Co. *v.* Monarch Ventilator Co. (184 Fed., 84) 16

Waterman *v.* McKenzie (138 U. S., 252) 6, 11, 15, 16

IN THE

Supreme Court of the United States

October Term, 1925

No. 87

INDEPENDENT WIRELESS TELEGRAPH COMPANY, Petitioner, *v.* RADIO CORPORATION OF AMERICA, Respondent.	On Writ of Certiorari to the United States Circuit Court of Appeals for the Second Circuit.

BRIEF OF AMICUS CURIAE, AND APPLICATION TO FILE A BRIEF AND BE HEARD AS SUCH.

APPLICATION FOR PERMISSION TO FILE BRIEF AND TO BE HEARD AMICUS CURIAE.

I respectfully ask for permission to file a brief and to be heard *amicus curiae*.

I represent the DeForest Radio Telephone & Telegraph Company, an *involuntary* party plaintiff to the bill of complaint.

The respondent filed its bill against the petitioner and the American Telephone & Telegraph Company. It joined the DeForest Company as a party plaintiff without its consent.

In paragraph 8 of the bill (R., p. 2) it is alleged that the DeForest Company, by an agreement dated March

16th, 1917, transferred "*a license*" under the patents in suit to the Western Electric Company, which in turn assigned all of the rights acquired by it under the agreement to the Telephone Company, and that the respondent acquired a "*license*" through the latter under a series of agreements detailed in paragraph 9 of the bill.

The first point of the brief of counsel for the respondent is that the *title* to these patents is in the Telephone Company and that the DeForest Company is but a non-exclusive licensee. An extensive argument to establish this proposition is advanced.

The question of the title to these patents is of very great importance to the respondent and the DeForest Company, because there is pending in the United States District Court for the District of Delaware a suit brought by the DeForest Company against the respondent, in which the question of title to these patents is directly in issue and, as to one of the parties, is in all probability decisive of the suit. On an application for preliminary injunction in that suit, Judge Morris held the title to be in the DeForest Company (*DeForest* v. *Radio Corporation*, 3 Fed. [2nd], 847). The final hearing in the case has been had and it is now awaiting decision.

Two similar suits, instituted by the DeForest Company against other concerns, are pending in the United States District Court for the Eastern District of Pennsylvania. The question of title to the patents in suit is of exactly the same importance in those cases as it is in the Delaware suit. Outside of the case at bar and the cases instituted by the DeForest Company just mentioned, the question of the title to these patents is of no importance because the patents have expired.

If it becomes necessary for this court, in the case at bar, to pass upon the question of title, the DeForest Company desires to have its position regarding the title placed be-

fore this court, to the end that its interests may be protected in this litigation as fully as is possible.

Consequently, I respectfully ask, as counsel for the DeForest Company, for permission to file a brief and be heard *amicus curiae.*

I have been informed by counsel for the petitioner and respondent that they will not object.

BRIEF.

The *question of title,* although made the leading point in the brief of the respondent, *does not* arise in this case if it should be held that the respondent was justified in joining the DeForest Company as a plaintiff without its consent. That it had a right to do so is argued under Points II to VIII, inclusive, of respondent's brief, and the petitioner's brief is devoted exclusively to demonstrating that it had no such right. As the question of title is of very great importance to the DeForest Company and the respondent in other pending litigations, referred to above, it is thought that this court will not care to go into that question in this suit unless it finds it necessary and proper to do so in order to properly dispose of this suit.

The grounds upon which the application for the certiorari was based did not involve the question of title to the patents, and we cannot conceive that if that had been the ground of the application, this court would have allowed the writ. The application, on the other hand, to quote from the petition (p. 2), was based on the following grounds:

> 1. That the decision of the Court of Appeals proposes vitally to restrict the effect of the decision of this Court in *Crown, etc., Co.* v. *Nye, etc., Works,* 261 U. S., 24, 43 Sup. Ct., 254, by establishing the proposition that the essential party, the owner of the patent, may be brought into the case as a party

> plaintiff against its will merely by adding to the caption of the bill of complaint the name of the owner of the patent and reciting in the bill of complaint that the owner of the patent was asked to join and refused and is outside of the jurisdiction of the Court; thereby introducing great unsettlement and chaos in the field of patent litigation wherever infringement injurious to the rights of a licensee is alleged.
>
> 2. That the series of agreements by which the respondent Radio Corporation of America in the instant case acquired its license rights under the two patents here in suit conveys to the Radio Corporation similar rights in literally hundreds of important patents in the new radio industry. The litigation on those patents is already very large and promises to be larger. For that reason immediate final determination of the right of the Radio Corporation to sue *without joining the legal owner* of the patents is of vital importance to this young industry.

That the question of title would arise in this case was not foreshadowed in the bill of complaint because in paragraph 8 it is alleged that the DeForest Company transferred a *"license"* under the patents. The brief of the petitioner in this court states that "the bill of complaint alleges the title to the patents in suit is in the DeForest Radio Telephone & Telegraph Company." The important questions which the petition for the writ of certiorari stated that it was desired this court should settle, are reiterated on page 2 of the petitioner's brief.

Consequently this court may not feel bound to consider the question of title, even though it holds with the petitioner on the other questions. (See *Great Northern R. R. Co.* v. *U. S.*, 208 U. S., 452.)

ARGUMENT.

THE TITLE TO THE PATENTS IN SUIT IS IN THE DE FOREST RADIO TELEPHONE & TELEGRAPH COMPANY.

The question of title depends entirely upon the agreement entered into between the DeForest Company and the Western Electric Company under date of March 16th, 1917 (R., pp. 17-21, fols. 35-44). Prior to that agreement, the entire right, title and interest in the patents was vested in the DeForest Company subject only to an outstanding license to Sidney S. Myers. It becomes essential, therefore, to see exactly what was transferred to the Western Electric Company (the Telephone Company) and what was *reserved* to the DeForest Company by the agreement.

Agreement of March 16, 1917.

1. The granting clause states:

> "The said DeForest Company hereby * * * grants * * * a *license* * * *"
>
> "The said *license* is granted * * * for all transferable rights of said DeForest Company of any kind or nature whatsoever in said inventions, patents and applications, *except the rights hereinafter expressly reserved to itself by the DeForest Company.* The said license granted is exclusive * * * *except for the rights expressly reserved herein by the DeForest Company.*"

It will be noted that the parties called the instrument a *license* rather than an assignment, and that it purported to grant merely a *license*

> "to make, use, install, operate and lease, and to sell or otherwise dispose of to others for sale, installation and operation, apparatus and systems embodying or made or operating in accordance with"

the inventions mentioned in the agreement. The subsequent provision that the license was granted "for all transferable rights of said DeForest Company" was manifestly inserted because the DeForest Company had previously parted with certain rights in many of the inventions to Sidney S. Myers.

Moreover, the parties purported to grant only such rights *as were not reserved in the instrument to the DeForest Company.*

In *Littlefield* v. *Perry*, 88 U. S., 205, and *Waterman* v. *McKenzie*, 138 U. S., 252, it was held that an instrument in order to be construed as an assignment of a patent grant must convey (1) the *entire* right, title and interest of the patent; or, (2) an undivided portion of the entire right, title and interest (such as a one-half interest, a quarter interest, etc.); or, (3) the entire right, title and interest of the patent or an undivided portion thereof within and throughout a certain specified portion of the United States.

Consequently, the only way the agreement in question can be found to be an *assignment* is that it transferred the *entire* right, title and interest of the patent. A transfer of anything short of the entire right, title and interest would constitute only a license.

It is apparent that by the granting clause of the agreement the DeForest Company did not grant the *entire* right, title and interest because it granted "all transferable rights * * * *except* the rights * * * *expressly reserved to itself*." Therefore, the rights which the DeForest Company reserved to itself, it never parted with. The respondent attempts to confine the granting clause to the first portion thereof and would ignore the remainder. In other words, it says the grant was of "all transferable rights of the said DeForest Company of every kind and nature whatsoever." *That was not the granting*

clause. The grant, on the contrary, consists of the quoted portion plus the continuing portion "*except the rights hereinafter expressly reserved to itself by the DeForest Company.*"

It is not proper, of course, to break the granting clause in half and construe the same without reference to the remainder thereof.

In the usual retained license class of grant, the *entire* right, title and interest of the patent passes from the patentee to the grantee, and thereafter, i. e., after the grantee has acquired the entire monopoly, the grantor takes back a license, i. e., a flow of privilege from the grantee back to the grantor, which the grantee acquired and had the right to give back to the grantor. In the instant case, however, the Telephone Company at no time ever acquired by the *granting clause*, or otherwise, the rights which the DeForest Company reserved to itself. The Telephone Company was never in a position to *license* the DeForest Company because the rights retained by the DeForest Company *never passed from the DeForest Company to the Telephone Company*. Therefore, the Telephone Company, never having owned the privilege itself, could certainly not pass the privilege to the DeForest Company.

In *Gayler* v. *Wilder*, 10 How., 477, Wilder, the assignee of a patent for safes, sued in his own name. He had given Herring an *exclusive* right to make and sell the safes in the State of New York, where the infringement occurred. Wilder, however, *reserved* to himself the right to make safes in New York not within fifty miles of New York City, and to sell them in the State of New York on payment of the same royalty that Herring was to pay. This court held, as stated by Judge Hand in the case at bar,

"that in order to be an assignment authorizing the

> licensee to sue in his own name, *the license must exclude the licensor,* and that, as Wilder had reserved the right to make and sell safes within New York he remained the owner and he alone could sue" (R., p. 52).

Judge Hand also said in this case:

> "The authority of that case (Gaylor *v.* Wilder) has remained unshaken to the present time" (R., p. 52).

It is impossible to reconcile this "unshaken authority" of the Supreme Court with respondent's contention. This Court stated that to be an assignment the grantor must exclude everyone, *including himself.* In the instant case the grantor, DeForest Company, did not exclude itself, but did expressly refuse to transfer to the Telephone Company the rights it enumerated as reservations in the agreement.

Rights Never Parted with by the DeForest Company.

The rights which the DeForest Company acquired under the patent, and which it never parted with, are:

(1) Non-exclusive, assignable rights to make, use and sell for one purpose (paragraph 1 of March, 1917, agreement).

(2) *Exclusive,* assignable rights to make, use and sell for another purpose (paragraph 2).

(3) *Exclusive,* non-transferable, personal rights to grant a *non-exclusive license* to a particular concern (paragraph 3 of the agreement).

(4) Non-exclusive, non-transferable, personal rights

(a) To make and sell to the United States.
(b) To make and sell to amateurs.
(c) To make and sell to private users.

(d) To make and sell for use on ships.
(e) To make and use for radio distribution of news and music.
(f) To make and sell for use receiving apparatus for the reception of such news and music.
(g) To make, use and sell apparatus in reproduction of words and music from telephone and graphophone records (paragraph 4 of the agreement).

(5) The right to sue infringers in fields in which it retained rights.

It thus appears that the DeForest Company reserved *exclusive* rights to make, use and sell, in certain fields, *exclusive* rights to grant certain licenses; and non-exclusive rights to make, use and sell in other fields.

As will also be presently shown, the DeForest Company reserved the right to institute suits for infringement in any of the fields in which it "possesses rights," and thus reserved *the right of exclusion* (subject to be terminated by the Telephone Company in certain instances) *in any field in which it could make, use and sell.* But this is all that constitutes a patent monopoly,—the right of exclusion. This is all the DeForest Company acquired with the grant of the Letters Patent, and this is what it did not part with (*Crown Co.* v. *Nye Tool Works,* 261 U. S., 24).

The retention by the DeForest Company of the right of exclusion alone would defeat an interpretation of the document as an assignment.

In the respondent's brief the statement is made that the DeForest Company "transferred to the Western Electric Company all transferable rights." As before stated, what was actually transferred to the Western Electric Company was a *license* for all transferable rights, *except such as were expressly reserved to itself by the DeForest Company.* Manifestly, there is a vast difference between the two.

2. In the agreement of March 16th, 1917, it was specifically provided that either party thereto might

> "institute and conduct suits against others for infringement of any of said patents within the *fields in which it possesses rights*, but all such suits shall be conducted at the expense of the party bringing them, *which party shall be entitled to retain any judgment recovered in any such suits*" (R., p. 19, fol. 40).

An instrument is always construed according to the intention of the parties. Certainly, when the parties agreed that the DeForest Company might maintain suits for infringement in the fields in which it possessed rights, it is impossible to attribute to them an intention to *assign* the patents to the Western Electric Company or its assignee, the Telephone Company.

When the DeForest Company retained the right to sue in certain instances, it necessarily did not part with the whole of such right of exclusion.

Moreover, if the parties had intended the instrument to be an assignment, they would not have reserved a right in the DeForest Company to sue, because that company could not have brought suit unless it was the holder of the legal title. The provision for the retention of any damages recovered by the DeForest Company was undoubtedly inserted because of the nature of the license given to the Telephone Company. If it had not been for that clause, probably the Telephone Company could have claimed any moneys that might be recovered.

The reservation of a right to sue in the Telephone Company was entirely consistent with the existence of title in the DeForest Company, because the former, as an exclusive licensee, under the decisions existing at the time the agreement was made, could bring suit in its own name and that of the patent owner without the latter's consent.

(See cases cited in *Radio Corporation* v. *Independent Wireless Telephone Company*, 297 Fed., 520, 523.)

Judge Hand held that that was "settled law" until the decision in *Crown Company* v. *Nye Tool Works, supra,* which he felt had changed it. The Circuit Court of Appeals disagreed with him on this latter point.

That being the law at the time this agreement was drawn, it was entirely consistent with the title remaining in the DeForest Company for the parties to provide that the Telephone Company might bring suits. On the other hand, if the title was not in the DeForest Company and the latter was a mere licensee, the provision regarding the bringing of suits was ineffective for any purpose because DeForest Company could not bring a suit.

In construing the instrument, the Court, of course, will not attribute to the parties an intention to confer *upon the DeForest Company a right* (*to sue*) *which they could not confer and which, under the law, the DeForest Company could not exercise.*

3. Some of the rights retained by the DeForest Company were *exclusive.* This fact alone, we submit, demonstrates that the parties never intended the instrument in question to be an assignment. It is impossible, we think, to construe an instrument which *purports to be a license,* and which reserves *exclusive* rights in the licensor, to be an assignment. Such an agreement would not come within any of the above stated requirements that this court has held (*Littlefield* v. *Perry, supra,* and *Waterman* v. *McKenzie, supra*) essential to constitute an assignment. It is said in the brief of respondent that no exclusive rights were reserved by the DeForest Company *in the patents in suit.* That is true, but to be able to accept the thought on which this attempted segregation of the plaintiff's reservations is based, would necessitate considering the agreement of

March, 1917, in cut-up portions, not as a whole, i. e., *that it is a license as to some patents and an assignment as to others.* This, we submit, cannot be done. The agreement must be taken as a *whole* and construed *as a whole,* either to be a *license or an assignment.* Having in mind that while there are a great number of patents (rights under which were conveyed to the Telephone Company by the document), *only one granting clause was employed,* and that the terms of the granting clause limit the *quantum* of the grant of ALL of the patents, it must follow that the document is either an assignment as to *all* of the patents or a mere license as to *all.* An intention cannot be attributed to the parties to have the instrument operate as an assignment as to some patents and a license as to others when there is no attempt in the agreement to make any such differentiation, especially where they have denominated the instrument a *license* as to all patents and purported to merely grant a license.

4. If by the March, 1917, agreement it was intended that the title to the patent should pass to the Western Electric Company, then the provision that the latter might

> "transfer to others, in whole or in part, the rights granted by this instrument, and may assign rights hereunder, or grant licenses to various persons, firms or corporations for the several uses to which the inventions are applicable" (R., p. 21),

was mere surplusage. If the title passed to the Western Electric Company, it immediately, by virtue of its ownership alone, acquired all of those rights and it would not have been necessary to *expressly grant them.*

Litigation in Which the Question of Title to the Patents in Suit Has Been Passed Upon Directly or Indirectly.

Judge A. N. Hand, in a suit in the Southern District of New York brought by the Radio Corporation against one

Emerson, a surreptitious infringer of the patent, to which suit the DeForest Company was not a party, held that the Telephone Company, by the agreement of March 16th, 1917, had acquired title to the patent in suit. His opinion is not reported. It will be noted that if he had held differently, a flagrant infringer would have been able to escape the consequences of his wrongdoing.

Subsequently, however, the Radio Corporation brought the present suit.

The DeForest Company was joined as a party plaintiff *without its consent*, it being alleged that it was not within the jurisdiction and could not be made a party defendant. A motion was made to dismiss the bill on the ground

> "that the DeForest Radio Telephone & Telegraph Company, the *owner* of the patents in suit, has not joined in this litigation as a party plaintiff by duly signing and verifying the bill of complaint herein, and the plaintiff Radio Corporation of America is not such a licensee under the patents as to permit it to sue in its own name, in the name of the owner of the patents in suit, or to sue in the name of the owner of the patents joining itself as licensee under the patents" (R., p. 50).

Judge Learned Hand, after reviewing the March, 1917, agreement and the other agreements above set forth by which the Radio Corporation claims to have acquired its rights under the patent in suit, dismissed *the bill for lack of parties.* He squarely held that the DeForest Company was the owner of the patent and that "the actual presence of the owner" before the court was necessary.

Judge Manton, who wrote the opinion of the Circuit Court of Appeals, said that the Radio Corporation was an *exclusive licensee* in a certain field, and that being an exclusive licensee, it could maintain the suit in the name of the DeForest Company, the owner of the patent, with-

out the latter's consent, and ended the opinion with the statement (R., p. 61, fol. 138):

> "We have heretofore held that appellant's (Radio Corporation) license entitles it to sue *in the name of the patent* owner, and this disposes of the last argument on the appeal. Decree Reversed."

It will therefore be seen that while the Court of Appeals differed with Judge Hand as to the right of an exclusive licensee (assuming that the Radio Corporation was such) to make the owner of a patent a party plaintiff without his consent, it apparently concurred with his holding that the DeForest Company was the owner of the patent, because otherwise the decision could have been rested upon the mere fact that the DeForest Company was not the owner of the patent and hence not a necessary party. No attempt was made to rest the decision on any such ground.

As stated in the brief of counsel for the respondent, Judge Morris has held the title to be in the DeForest Company (*DeForest Radio Tel. & Tel. Co.* v. *Radio Corp.*, 3 Fed. [2nd], 847).

The Authorities Cited by Respondent.

We have already discussed *Gayler* v. *Wilder*. That decision was in no way shaken by *Littlefield* v. *Perry*, 21 Wall., 205, for in that case there was, in the first instance, "in most unmistakable language, an *absolute* conveyance by the patentee of his patent and inventions described" (21 Wall., 210). Thus, the instrument by which the assignee acquired his rights complied with the requirement set forth in the opinion of the Chief Justice in *Gayler* v. *Wilder*, that

> "the assignment must undoubtedly convey to him (the assignee) the *entire* and unqualified monopoly which the patentee held * * * *excluding the patentee himself, as well as others.*"

The patentee retained nothing. The rights which he acquired in the patent, he acquired by an *independent supplemental* agreement. The Court held that the two instruments, when construed together, conveyed to the assignee the title to the patent and granted a license back from the assignee to the patentee of the right to use the patent in certain furnaces (p. 220).

This was the construction given to that case by Judge Wallace in *Gamewell Fire-Alarm Telegraph Co.* v. *Brooklyn*, 14 Fed., 255, where he said (p. 256):

> "From the reasoning of the opinion it is evident, if there had never been a transfer of the patentee's right to the limited use of the invention, the interest transferred would not have been considered as vesting the statutory title in the assignees."

Waterman v. *Mackenzie* (138 U. S., 252) not only did not in any way depart from *Gayler* v. *Wilder*, but reiterated the principles upon which the latter rested.

In the recent decision of *Crown Die & Tool Co.* v. *Nye Tool & Machine Works*, 261 U. S., 24, the decision in *Gayler* v. *Wilder* is treated as expressing the existing law. For instance, in that case Chief Justice Taft said:

> "In Gayler *v.* Wilder, 10 How., 477, it was held that the grant of an exclusive right to make and vend an article within a certain territory upon paying to the assignor a cent per pound, reserving to the assignor the right to use and manufacture the article by paying the assignee a cent per pound, was only a license, * * *. The effect of the opinion in that case is that the monopoly granted the patentee is for one entire thing; and, in order to enable an assignee to sue, he must have received *the entire and unqualified monopoly* in the territory specified."

On the strength of that opinion, as thus construed, the Court in part based its ultimate conclusion.

Judge Davis speaking for the Circuit Court of Appeals of the Third Circuit in *Russell* v. *Boston Card Index Co.*, 276 Fed., 4, 7, said:

> "The grant of anything short of an *entire, unqualified* monopoly in the territory specified is a mere license. *Gayler & Brown* v. *Wilder* (10 How.), 51 U. S., 477, 494; *Waterman* v. *Mackenzie*, 138 U. S., 252; *Pope Manufacturing Co.* v. *Gormully, &c., Co.*, 144 U. S., 248, 250."

It therefore seems undoubtedly true, as Judge Learned Hand in the case before cited said, that *Gayler* v. *Wilder* remains unshaken to the present day by any decisions of the Supreme Court.

If the decision of Judge Holt in *Sirocco Engineering Co. et al.* v. *Monarch Ventilator Co.*, 184 Fed., 84 (cited by respondent), is not in harmony with *Gayler* v. *Wilder*, it can, of course, be given no weight. It is clear, however, that Judge Holt considered the case within *Littlefield* v. *Perry*, where, as before pointed out, there was, in the first instance, a complete and unqualified assignment and then the giving back of a license from the assignee to the patentee. That is what Judge Holt therefore considered to be the legal effect of the instrument which he was construing. This is borne out by an examination of the granting clause in that instrument. This, taken from the demurrer book in the files of the court, reads as follows:

> "Now, Therefore, in consideration of One Dollar, and other good and valuable considerations, duly paid and rendered unto the Patentee by the Company, the receipt whereof is hereby acknowledged, the Patentee does hereby grant unto the Company the sole and exclusive license to manufacture, sell and use, and to sub-license others to manufacture, sell and use, within and throughout the United States of America and the territories and dependencies thereof (including Porto Rico, Hawaii and the

> Philippines), each and all of the inventions covered by the patents recited in the annexed schedule, and by the patents to be granted upon each and all of the applications recited in said schedule, the same to continue to the full ends of the terms of said Letters Patent granted and to be granted respectively."

It will be noted that a *period* terminates the granting clause. Thereafter, in the instrument, is contained the provision quoted in 184 Fed., 84. Thus it appears that by the *granting clause,* the *entire* right, title and interest passed from the grantor, so that the grantee thereafter legally could return to the grantor a license under the monopoly that it acquired. Judge Holt also cites, as do counsel for the respondent in this case, *Pope Manufacturing Co.* v. *Clark,* 46 Fed., 789, 792. It was stated in that case that the complainant acquired

> "the title to this Overman patent * * * *by assignment* from Albert H. Overman and the Overman Wheel Company; and *by agreement of that date* it was stipulated between the same parties that the Overman Wheel Company should have the right * * * to make, use, and sell the inventions described in that patent."

The Court then said:

> "It is clear that the legal title of the Overman patent is in the complainant, and that the Overman Wheel Company is only a licensee."

The transfer and the license were thus affected by *two instruments* as in *Littlefield* v. *Perry.* This further demonstrates that Judge Holt considered that the instrument before him was of exactly the same nature as the combined instruments in *Littlefield* v. *Perry.*

In *Frankfort & Co.* v. *Pepper,* 26 Fed., 336 (the opinion is very brief), Judge Wallace said:

> "The conveyance was a *grant* of the patent, with a reservation of a license to the grantor; and is in legal effect as though the grantor had made an *unqualified transfer* of the patent to the complainant, and had *at the same time received* from the complainant a license back."

Manifestly, the instrument before the Court in that case contained, in the first instance, a *complete grant* to the assignee. In that aspect, the case is no different from *Littlefield* v. *Perry*.

The grant to the assignee and the giving back of a license to the assignor can, of course, be accomplished in one instrument as well as two. The distinctive characteristic is whether the owner of the patent has, in the first instance, *parted with all that he had*. If he has, the assignee is in a position to give back to the assignor, either in a separate or in the same instrument, a license. If, on the other hand, he did not part with all that he had, as in the case at bar where the grant was of a license "for all transferable rights * * * *except the rights hereinafter expressly reserved to itself by the DeForest Company*," then under *Gayler* v. *Wilder* the instrument is merely a license.

In *Griggs, Cooper & Co.* v. *Erie Preserving Co.*, 131 Fed., 359, not only was the court dealing with a trade-mark (which, so far as we are able to gather, is not necessarily controlled by the rules relating to the transfer of patents) but the instrument was clearly an assignment of the character of that which was before the court in *Littlefield* v. *Perry*. The granting clause was

> "does hereby *grant*, license, *assign* and *set over* unto the said parties of the second part, and their successors in business the *absolute and exclusive* use * * * *as fully and entirely as the same would have been held by the said party of the first part had this agreement not been made.*"

Later in the instrument there is a proviso, which, in its legal effect, was clearly a license from the assignee to the assignor. It provides that nothing therein contained should prevent the assignor "from using and enjoying the said trade-marks hereby assigned as aforesaid" on certain goods. Thus there was, in the first instance, a complete transfer of the assignor's rights in the trade-mark. The parties treated it as an assignment because in the proviso, wherein the assignor's future rights were prescribed, they used the expression "*hereby assigned.*" The legal effect of the *proviso* was exactly the same as the second agreement in *Littlefield* v. *Perry.*

In *Andrew Jergens Co.* v. *Woodbury, Inc.*, 273 Fed., 952, the court found that "the agreement discloses a purpose to *transfer* * * * *all* rights in the trade-mark * * *." Viewed in this light the decision is in entire harmony with *Littlefield* v. *Perry* and *Gayler* v. *Wilder.* If there was a purpose to transfer all the rights in the trade-mark the instrument was of course an assignment.

Such a purpose, however, cannot be gathered from the March, 1917, agreement in the case at bar, because that instrument purported to grant a mere license under such rights as the DeForest Company had *except* the rights expressly reserved to it. The rights reserved, therefore, never passed to the licensee.

CONCLUSION.

It is respectfully submitted that if it becomes necessary to pass upon the question of title to the patents in suit, that it should be held to be in the DeForest Company.

Respectfully submitted,

THOMAS G. HAIGHT,
Amicus Curiae.

See same case 270 U. S. 84.

SUPREME COURT OF THE UNITED STATES.

No. 87.—October Term, 1925.

Independent Wireless Telegraph Company, Petitioner, *vs.* Radio Corporation of America.	On a Writ of Certiorari to the United States Circuit Court of Appeals for the Second Circuit.

[January 11, 1926.]

Mr. Chief Justice Taft delivered the opinion of the Court.

The Radio Corporation, a corporation of Delaware, filed a bill in equity in the Southern District of New York, joining with itself the De Forest Radio Telephone & Telegraph Company also of Delaware, as co-plaintiff, against the Independent Wireless Telegraph Company of Delaware, and the American Telephone & Telegraph Company of New York. The case made in the bill was this:

Lee De Forest invented and received patents Nos. 841387 and 879532, dated in 1908 and 1909, for devices for amplifying feeble electric currents and certain new and useful improvements in space telegraphy. After giving limited licenses to the American Telephone & Telegraph Company, he assigned the patents to the De Forest Radio Telephone and Telegraph Company. On March 16, 1917, the De Forest Company, by writing duly recorded, gave an exclusive license to make, use and sell the devices for the life of the patents to the Western Electric Company, reserving to itself non-exclusive, non-transferable and personal rights to make, use and sell them for defined purposes. The Western Electric Company then assigned all that it thus received from the De Forest Company to the American Telephone Company. The American Telephone Company, on July 1, 1920, made a contract with the General Electric Company, by which they exchanged rights in various patents owned or controlled by each, including these rights in the De Forest patents. Some seven months prior, on November 20, 1919, the General Electric Company had granted to the Radio Corporation, the plaintiff, an exclusive license to use

and sell for "radio purposes", i. e., "for transmission or reception of communication by what are known as electric magnetic waves except by wire", all inventions owned by the General Electric Company or thereafter acquired by it. The American Telephone Company subsequently confirmed in the Radio Corporation these after-acquired rights in the De Forest patents. Thus there came from the De Forest Company to the Radio Corporation, exclusive rights to use and sell in the United States, for radio purposes, apparatus for transmission of messages, and especially for use between ship and shore for pay.

The defendant, the Independent Wireless Company, has bought the same apparatus with the lawful right to use it in the amateur and experimental field only. The apparatus thus bought bears a label with such a limitation on its use. The charge in the bill is that the Independent Company is using the apparatus, or the part of it called "radio tubes", in the commercial radio field between ship and shore for pay and thus is violating the Radio Corporation's rights in this field. An injunction is prayed and an accounting of profits and all damages to the plaintiffs and the American Telephone Company as their interests shall appear.

The twenty-fifth averment of the bill is that "the plaintiff, the De Forest Radio Telephone & Telegraph Company, as hereinbefore alleged, has certain rights in the patents in suit herein; that before filing this bill of complaint, said De Forest Radio Telephone & Telegraph Company, was requested to consent to join, as a co-plaintiff, herein, but declined; that said De Forest Radio Telephone & Telegraph Company is not within the jurisdiction of the Court and therefore can not be made a defendant herein; and that therefore to prevent a failure of justice, and to enable the plaintiff Radio Corporation of America to protect its exclusive rights under the patents in suit, said De Forest Radio Telephone & Telegraph Company, is made a plaintiff herein without its consent."

After securing an order for a bill of particulars compliance with which disclosed the various agreements referred to in the bill and facts relevant thereto, the Independent Wireless Telegraph Company, defendant, moved that the Court dismiss the bill of complaint, upon the following ground:

"That the De Forest Radio Telephone & Telegraph Company, the owner of the patent in suit, has not joined in this litigation as a party plaintiff by duly signing and verifying the bill of complaint herein, and the plaintiff Radio Corporation of America is

not such a licensee under the patents as to permit it to sue alone in its own name, in the name of the owner of the patents in suit, or to sue in the name of the owner of the patents joining itself as a licensee under the patents."

The District Court sustained the motion and dismissed the bill, in the view that it was bound by decisions of this Court to hold that the De Forest Company was the owner of the patent and an indispensable party and being out of the jurisdiction could not be made a party defendant by service or joined as a party plaintiff against its will—297 Fed. 518. The Circuit Court of Appeals on appeal reversed the District Court, held that the De Forest Company was properly made co-plaintiff by the Radio Corporation, and remanded the case for further proceedings. 297 Fed. 521. We have brought the case here on certiorari. Section 240, Judicial Code.

The respondent in its argument to sustain the ruling of the Circuit Court of Appeals presses two points. The first is that by the contract between the De Forest Company and the Western Electric Company title to the patent was vested in the Western Electric Company and from it by assignment in the American Telephone & Telegraph Company; that the latter is a party defendant, having declined to be a plaintiff, and so satisfies the requirement of the presence in such a suit as a party of the owner of the patent. The difficulty the respondent meets in this suggestion is that its bill avers that what the American Telephone Company acquired from the De Forest Company was a license, so called in the contract creating it, and the making of the De Forest Company a party plaintiff to the bill was necessarily on the theory that it, and not the American Telephone Company is the owner of the patent. The contracts between the corporations involved in the transfer of rights under the patent are long and complicated and in order to be fully understood require some knowledge of the new radio field. The Court is loath to depart, if it could, from the theory on which the bill was framed and both courts have acted, unless required to do so.

The question for our consideration then is, Can the Radio Company make the De Forest Company a co-plaintiff against its will under the circumstances of the case?

Section 4919, R. S., is as follows:

"Damages for the infringement of any patent may be recovered by action on the case, in the name of the party interested, either

as patentee, assignee, or grantee. And whenever in any such action a verdict is rendered for the plaintiff, the court may enter judgment thereon for any sum above the amount found by the verdict as the actual damages sustained, according to the circumstances of the case, not exceeding three times the amount of such verdict, together with the costs."

In *Goodyear* v. *Bishop,* 10 Fed. Cases, 642, Case No. 5558, a suit for damages for infringement had been brought in the name of the patentee by a licensee under the 14th section of the Patent Act of 1836, c. 357, 5 Stat. 357, which contained language similar to section 4919. The defendant moved with the consent of the patentee to discontinue the suit. It was contended that as the patentee had stipulated with the licensee to sue infringers, his remedy was on the covenant. Mr. Justice Nelson at the Circuit denied the motion. He said that a suit at law to protect the patent right was properly brought in the name of the patentee, that the license was sufficient to give the protection sought, and that the covenant by the patentee did not take from the licensee the remedy by use of the patentee's name to proceed directly against the wrongdoer. The same ruling was made in *Goodyear* v. *McBurney,* 10 Fed. Case 699, Case No. 5574.

These cases were decided in 1860 by a Justice of this Court, and no case is cited to us questioning their authority. Indeed the cases have been since referred to a number of times with approval by distinguished patent judges. Mr. Justice Blatchford while Circuit Judge in *Nelson* v. *McMann,* 17 Fed. Cases, 1325, 1329, Case No. 10109; Mr. Justice Gray while Chief Justice of the Supreme Judicial Court of Massachusetts in *Jackson* v. *Allen,* 120 Mass. 64, 77; Judge Lowell in *Wilson* v. *Chickering,* 14 Fed. 917, 918; Judge Shipman in *Brush Swan Company* v. *Thompson Company,* 48 Fed. 224, 226. The terms "action on the case" and the phrase "in the name of the party in interest, either as patentee, assignee or grantee" in Section 4919 were evidently construed to constitute a remedy at law like the suit at common law on a chose in action in the name of the assignor in which the assignment gave the assignee the right as attorney of the assignor to use the latter's name. Lectures on Legal History, Ames, 213. See also *Eastman* v. *Wright,* 6 Pick. 312, 316; *Pickford* v. *Ewington,* 4 Dowling P. C. 458; *McKinney* v. *Alvis,* 14 Ill. 33.

But Section 4919 applied by its terms only to actions on the case at law to which the licensee was not a necessary and hardly a

proper party. This is a bill in equity. The remedy for violation of an exclusive licensee's interest in equity under the patent laws is found in Section 4921, R. S., which is as follows:

"The several courts vested with jurisdiction of cases arising under the patent laws shall have power to grant injunctions according to the course and principles of courts of equity, to prevent the violation of any right secured by patent, on such terms as the court may deem reasonable; and upon a decree being rendered in any such case for an infringement, the complainant shall be entitled to recover, in addition to the profits to be accounted for by the defendant, the damages the complainant has sustained thereby; and the court shall assess the same or cause the same to be assessed under its direction. And the court shall have the same power to increase such damages, in its discretion, as is given to increase the damages found by verdicts in actions in the nature of actions of trespass upon the case."*

There is no express authority given to the licensee to use the name of the patent owner in equity as we have seen that he can under Section 4919 in suits at law. The presence of the patentee or his assignee in the equity suit however, it has been held, is just as essential to obtaining an injunction or an accounting of profits or damages under the patent laws as it is in an action on the case for damages at law. Indeed both the owner and the exclusive licensee are generally necessary parties in the action in equity. *Waterman* v. *Mackenzie,* 138 U. S. 252; *Littlefield* v. *Perry,* 21 Wall. 205, 223; *Paper Bag Cases,* 105 U. S. 766; *Birdsell* v. *Shaliol,* 112 U. S. 485, 486.

It is urged on behalf of the respondent that in equity the real party in interest, the exclusive licensee whose contract rights are being trespassed upon by the infringer, should be able without the presence of the owner of the patent to obtain an injunction and damages directly against the infringer. We recognize that there is a tendency in courts of equity to enjoin the violation of contract rights which are invaded by strangers in a direct action by the party injured, instead of compelling a roundabout resort to a remedy through the covenant, express or implied, of the other

*Section 4921 was amended by Act of Mar. 3, 1897, 29 St. 694, c. 391, sec. 6, adding a six years' limitation on actions under it, and by Act of Feb. 18, 1922, 42 St. 392, c. 58, sec. 8, allowing expert evidence as to damages and requiring notice of litigation to Commissioner of Patents for record by endorsement on file wrapper of patents involved. The amendments do not affect the question here.

contracting party. But such a short cut however desirable is not possible in a case like this. A suit without the owner of the patent as a plaintiff if maintainable would not be a suit under Section 4921 of the patent laws but only an action in equity based on the contract rights of the licensee under the license and a stranger's violation of them. There would be no jurisdiction in courts of the United States to entertain it unless by reason of diverse citizenship of the parties which does not exist in this case. *Hill* v. *Whitcomb,* 12 Fed. Cases, 182, 185, Case No. 6502; *Wilson* v. *Sandford,* 10 How. 99, 101; *Albright* v. *Feas,* 106 U. S. 613, and cases cited.

What remedies then can equity afford in a case like this? *Waterman* v. *Mackenzie,* 138 U. S. 252, involved the question whether a grant from the owner of the patent of the exclusive right to make and sell but not to use was an assignment under the statute entitling the grantee in his own name to sue an infringer in equity, and it was held that it was not. Mr. Justice Gray, speaking for the Court, at page 255 said:

"In Equity, as at law, when the transfer amounts to a license only, the title remains in the owner of the patent; and suit must be brought in his name, and never in the name of the licensee alone, unless that is necessary to prevent an absolute failure of justice, as where the patentee is the infringer, and cannot sue himself. Any rights of the licensee must be enforced through or in the name of the owner of the patent, and perhaps, if necessary to protect the rights of all parties, joining the licensee with him as a plaintiff. Rev. Stat. § 4921. Littlefield *v.* Perry, 21 Wall. 205, 223; Paper Bag Cases, 105 U. S. 766, 771; Birdsell *v.* Shaliol, 112 U. S. 485-487. And see Renard *v.* Levinstein, 2 Hem. & Mil. 628."

Littlefield v. *Perry,* 21 Wallace 205, was a suit for infringement by one to whom was granted an exclusive right to make, use and vend by the patent owner. The Court held that it was an assignment under the statute, but further held that even if it were only an exclusive license, the suit might be maintained under the patent laws, because the patentee who had been privy to the alleged infringement had been made a party defendant with the infringer. This Court said at page 223:

"A mere licensee can not sue strangers who infringe. In such case redress is obtained through or in the name of the patentee or his assignee. Here, however, the patentee is the infringer, and as he can not sue himself, the licensee is powerless, so far as the courts of the United States are concerned, unless he can sue in his own name. A court of equity looks to substance rather than form. When it has jurisdiction of parties it grants the appropriate relief

without regard to whether they come as plaintiff or defendant. In this case the person who should have protected the plaintiff against all infringements has become himself the infringer. He held the legal title to his patent in trust for his licensees. He has been faithless to his trust, and courts of equity are always open for the redress of such a wrong. This wrong is an infringement. Its redress involves a suit, therefore, arising under the patent laws, and of that suit the Circuit Court has jurisdiction."

The presence of the owner of the patent as a party is indispensable not only to give jurisdiction under the patent laws but also in most cases to enable the alleged infringer to respond in one action to all claims of infringement for his act and thus either to defeat all claims in the one action, or by satisfying one adverse decree to bar all subsequent actions.

If the owner of a patent being within the jurisdiction refuses or is unable to join an exclusive licensee as co-plaintiff, the licensee may make him a party defendant by process and he will be lined up by the Court in the party character which he should assume. This is the necessary effect of the decision in *Littlefield* v. *Perry, supra.* See also *Brammer* v. *Jones,* 4 Fed. Cases 11, Case No. 1806; *Gamewell Telegraph Company* v. *Brooklyn,* 14 Fed. 255; *Waterman* v. *Shipman,* 55 Fed. 982, 986; *Libbey Glass Company* v. *McKee Glass Company,* 216 Fed. 172; affirmed 220 Fed. 672; *Hurd* v. *Goold,* 203 Fed. 998. This would seem to be in accord with general equity practice. *Waldo* v. *Waldo,* 52 Mich. 91, 94. A *cestui que trust* may make an unwilling trustee a defendant in a suit to protect the subject of the trust. *Porter* v. *Sabin,* 149 U. S. 473, 478; *Brun* v. *Mann,* 151 Fed. 145, 153; *Monmouth Company* v. *Means,* 151 Fed. 159, 165. *Eastman* v. *Wright,* 6 Pick. 312, 316.

It seems clear then on principle and authority that the owner of a patent who grants to another the exclusive right to make, use or vend the invention, which does not constitute a statutory assignment, holds the title to the patent in trust for such a licensee, to the extent that he must allow the use of his name as plaintiff in any action brought at the instance of the licensee in law or in equity to obtain damages for the injury to his exclusive right by an infringer or to enjoin infringement of it. Such exclusive licenses frequently contain express covenants by the patent owner and licensor to sue infringers that expressly cast upon the former the affirmative duty of initiating and bearing the expense of the litigation. But without such express covenants, the implied obli-

gation of the licensor to allow the use of his name as indispensable to the enjoyment by the licensee of the monopoly which by personal contract the licensor has given. Inconvenience and possibly embarrassing adjudication in respect to the validity of the licensor's patent rights, as the result of suits begun in aid of the licensee, are only the equitable and inevitable sequence of the licensor's contract, whether express or implied.

But suppose the patentee and licensor is hostile and is out of the jurisdiction where suit for infringement must be brought, what remedy is open to the exclusive licensee? The matter has been given attention by courts dealing with patent cases. In *Wilson* v. *Chickering, supra,* at p. 218, an exclusive licensee brought a bill in equity to enjoin infringement without joining the owner of the patent. A demurrer was sustained with thirty days to amend. Judge Lowell after saying that a mere licensee can not generally in equity sue in equity without joining the patentee, said:

"I do not, however, intend to be understood that plaintiff will be without remedy if he can not find the patentee, or if the latter is hostile. The statute does not abridge the power of a court of equity to do justice to the parties before it if others who can not be found are not absolutely necessary parties, as in this case the patentee is not. At law the plaintiff could use the name of a patentee in an action and perhaps he may have the right in equity under some circumstances. The bill gives no explanation of his absence; but it was said in argument that he is both out of the jurisdiction and hostile. If so, no doubt there are methods known to a court of equity by which the suit may proceed for the benefit of the only person who is entitled to damages."

In *Renard* v. *Levinstein,* 2 Hem. & Mil. 628, before Vice Chancellor Page Wood, afterwards Lord Hatherly, an exclusive licensee brought suit to enjoin infringement by a stranger and made the patentees who were a foreign firm co-plaintiffs. There was no objection to this action. No specific authority for this appeared, but it seems to have been implied from the relation of the exclusive licensee and the owner of the patent. It has some significance here in the fact that it was apparenly referred to by Mr. Justice Gray, in *Waterman* v. *Mackenzie, supra,* as indicating what could be done in an English court of equity to enable the licensee to secure protection in the name of the owner of the patent.

In the case of *Brush Swan Electric Company* v. *Thompson & Houston,* 48 Fed. 224, the Brush Swan Company in Connecti-

cut sued the Thompson-Houston Company in equity for infringing the former's rights as an exclusive licensee for the sale of a device made under a patent owned by the Brush Electric Company of Cleveland, Ohio. The Brush-Swan Company made the Brush Electric Company a co-plaintiff. The Cleveland Company appeared for the purpose of asking that its name be stricken out as a party complainant, because the bill had been filed without its consent. The motion to strike out the co-plaintiff's name was denied by Judge Shipman, on the ground that as the patent owner, being without the jurisdiction, could not be served with process, there would otherwise be absolute failure of justice. The Judge said that *prima facie* there was an implied power in the exclusive licensee under such circumstances to make the patent owner a party plaintiff. The same conclusion was approved by the Ninth Circuit Court of Appeals in *Brush Electric Company* v. *California Electric Company,* 52 Fed. 945, before McKenna and Gilbert, Circuit Judges, and Knowles, the District Judge, affirming the same case in 49 Fed. Rep. 73, and by the same court in *Excelsior Company* v. *Allen,* 104 Fed. 553, and in *Excelsior Company* v. *The City of Seattle,* 117 Fed. 140, 143, 144. In *Hurd* v. *Goold Co.,* 203 Fed. 998, before the Circuit Court of Appeals of the Second Circuit (Lacombe, Coxe and Noyes, Judges), Hurd, who was the exclusive licensee, joined with himself two corporations who held the legal title to the patent. The corporations had been enjoined in the Sixth Circuit from maintaining suits for infringement. The Second Circuit Court held that Hurd was entitled to present his licensors, that is the owners of the patent, as co-plaintiffs, even against their will and in spite of their protests. This doctrine was approved by the same Court in *Radio Corporation* v. *Emerson,* 296 Fed. 51, 54. See also *McKee Glass Co.* v. *Libbey Glass Co.,* 220 Fed. 672 (3rd C. C. A.), affirming same, 216 Fed. 172; *Chisholm* v. *Johnson,* 106 Fed. 191, 212; *Owatonna Mfg. Co.* v. *Fargo,* 94 Fed. 519, 520.

It is objected to the relevancy of these authorities that not one of them actually presents the case here. In all of them it is said the owner or patentee was within the jurisdiction of the Court and could be served, or else had come into the jurisdiction voluntarily to move for leave to withdraw as a party. As the Court had the owner before it, and the owner was in duty bound to become a party, the Court could prevent the withdrawal. Here the owner is not in the jurisdiction and does not come in. It is the

defendant, the alleged infringer, which objects to using the name of the owner as plaintiff without its consent.

We think the cases cited go beyond the defendant's interpretation of them and do hold that if there is no other way of securing justice to the exclusive licensee, the latter may make the owner without the jurisdiction a co-plaintiff without his consent in the bill against the infringer. Equity will not suffer a wrong without a remedy. 1 Pomeroy's Equity Jurisprudence, 4th Ed., secs. 423, 424. While this maxim is of course not of universal application, it justifies the short step needed to hold that in an equity suit under Section 4921, where otherwise justice to the exclusive licensee would fail, he may make the owner of the patent a co-plaintiff in his bill under Section 4921, in analogy to the remedy given him in an action on the case at law for damages under Section 4919, for the two sections are plainly *in pari materia.*

In so doing, equity does no more than courts of law did, at one period in their history, as we have seen, in implying in the assignee of a chose in action, a power of attorney to maintain an action in the name of the assignor in order to assure to the assignee the benefits of his assignment. Where the assignor attempted to interfere with the exercise of the power of attorney by collection of the assignee's claim or where for any technical reason the remedy through the exercise of implied power of attorney was unavailable, equity intervened to lend its aid to the assignee and secure a recovery for his benefit. See *Lenox* v. *Roberts,* 2 Wheat. 373; *Hammond* v. *Messenger,* 9 Sim. 327; *Roberts* v. *Lloyd,* 1 DeG. & J. 208; *Hodge* v. *Cole,* 140 Mass. 116; *Hughes* v. *Nelson,* 29 N. J. Eq. 547; *Hayes* v. *Hayes,* 45 N. J. Eq. 461.

The objection by the defendant that the name of the owner of the patent is used as a plaintiff in this suit without authority is met by the obligation the owner is under to allow the use of his name and title to protect all lawful exclusive licensees and sub-licensees against infringers, and by the application of the maxim that equity regards that as done which ought to be done. *Camp* v. *Boyd,* 229 U. S. 530, 559; *United States* v. *Colorado Anthracite Company,* 225 U. S. 219, 223; *Craig* v. *Leslie,* 3 Wheat. 563, 578. The Court should on these grounds refuse to strike out the name of the owner as co-plaintiff put in the bill under proper averment by the exclusive licensee.

The owner beyond the reach of process may be made co-plaintiff by the licensee, but not until after he has been requested to become such voluntarily. If he declines to take any part in the case, though he knows of its imminent pendency and of his obligation to join, he will be bound by the decree which follows. We think this result follows from the general principles of *res judicata.* In *American Bell Telephone Company* v. *National Telephone Company,* 27 Fed. 663, heard before Judges Pardee and Billings, the question was whether the National Telephone Company was bound by a decree in favor of the Bell Company for infringement against a Pittsburg Company claiming under a license from the National Company. The National Company under a contract upon notice to defend its license took control of the case but becoming dissatisfied with a preliminary ruling of the Court withdrew its counsel and evidence from the case. The National Company was held bound on the authority of the case of *Robbins* v. *Chicago,* 4 Wall. 657. When Robbins was building a store in Chicago by an independent contractor, an areaway adjoining the street was left open. A passerby fell in and was injured. He sued the city and recovered judgment for $15,000. Robbins had been previously warned by the city of the danger of the unprotected area and had notice of the accident and of the pendency of the suit but did not become a party. The city then sued Robbins and was given a judgment against him for the amount of the recovery against the city. This Court in sustaining the result held that parties bound by the judgment in such a case included all who were directly interested in the subject matter who had knowledge of the pendency of the suit and a right to take part therein, even if they refused or neglected to appear and avail themselves of this right. *Lovejoy* v. *Murray,* 3 Wall. 1, 19; *Plumb* v. *Goodnow,* 123 U. S. 560; *Robertson* v. *Hill,* 20 Fed. Cases, 944, Case No. 11925; *Miller* v. *Liggett,* 7 Fed. 91.

By a request to the patent owner to join as co-plaintiff, by notice of the suit after refusal and the making of the owner a co-plaintiff, he is given a full opportunity by taking part in the cause to protect himself against any abuse of the use of his name as plaintiff, while on the other hand the defendant charged with infringement will secure a decree saving him from multiplicity of suits for infringement. Of course a decree in such a case would constitute an estoppel of record against the patent owner if chal-

lenged only after evidence of the exclusive license, the request to join as co-plaintiff and the notice of the suit.

There is nothing in the case of *Crown Company* v. *The Nye Tool Works,* 261 U. S. 24, which conflicts with this conclusion. That case was brought by the plaintiff, a licensee, to establish as a principle of patent practice that a transfer by an owner of a patent to another conferring only the right to sue a third for past and future infringements of the patent, without the right to make, use and vend the patented article, was an assignment of the patent under Section 4898 R. S. We declined so to hold. There was no offer to make the owner of the patent a party, nor were there any facts showing that the owner would not join as co-plaintiff or was not in the jurisdiction. The appellant stood solely upon his right to sue as an assignee of the patent and was defeated.

We hold that the De Forest Company was properly joined as a co-plaintiff by the Radio Corporation upon the 25th averment of the bill. This makes it unnecessary for us to consider the argument on behalf of the appellee that the American Telephone Company was the owner of the patent instead of the De Forest Company.

Decree affirmed.

A true copy.

Test:

Clerk, Supreme Court, U. S.